PUBLIC WORKS DEPARTMENT

405 6TH STREET

SIOUX CITY, IOWA 51101

SPECIFICATIONS & DOCUMENTS
FOR
2016 RIVERS LANDING PARKING FACILITY REPAIRS PROJECT

PROJECT # 6864-728-012

CONTRACT DOCUMENTS

OWNERSHIP OF DOCUMENT

This document, and the ideas and designs incorporated herein, as an instrument of professional service, is the property of the City of Sioux City, Iowa and is not to be used, in whole or in part, for any other project without the written authorization of the City.

SPECIFICATIONS & DOCUMENTS FOR
2016 RIVERS LANDING PARKING FACILITY REPAIRS PROJECT
PROJECT # 6796-728-012

ENGINEER'S CERTIFICATION

LICENSED PROFESSIONAL ENGINEER TERRENCE ARVO HAKKOLA 14501 IOWA	I hereby certify that this engineering document was prepared by me or under my direct personal supervision and that I am a duly licensed Professional Engineer under the laws of the State of Iowa. Date: 3/4/16 **Terrence, A. Hakkola, P.E.** License No. 14501 My renewal date is **December 31, 2017** Pages or sheets covered by this seal: **Entire Document.**

SPECIFICATIONS & DOCUMENTS FOR RIVERS LANDING 2016
RIVERS LANDING PARKING FACILITY REPAIRS PROJECT

TABLE OF CONTENTS

SECTION

A - INTRODUCTORY INFORMATION
Project Title
Engineer's Certification A-1
Table of Contents A-2
Notice of Public Hearing A-4

B - BIDDING INFORMATION
Instructions to Bidders B-1
Approval for Award and Award of Contract B-8
Title VI - Regulations Compliance B-10

C - BIDDING REQUIREMENTS
Bid Form C-1
Bid Items, Quantities and Prices C-3
List of Major Subcontractors and Suppliers C-4
Bidder Status Form C-5
Affirmative Action Information C-7
Bid Bond C-8

D - CONTRACTING REQUIREMENTS
Form of Contract D-1
Contract Attachment: Bid Items, Quantities, and Prices D-3
Performance, Payment and Maintenance Bond D-4
Insurance Certificate D-7

GENERAL CONDITIONS ..... GC-1 – GC-31

SPECIAL PROVISIONS ..... SP-1 – SP-3

TECHNICAL SPECIFICATIONS
Iowa Statewide Urban Design and Specifications (SUDAS) – 2016 Edition
(Not Bound Herein, but available to download at www.iowasudas.org)

Sioux City Supplement to SUDAS 2015 Edition
(Not Bound Herein, but available to download at Sioux-city.org/engineering)

01000 Administrative Requirements
01112 Summary of Work for Restoration

02000	Work Items
02030	Surface Preparation for Patching
03371	Shotcrete
03381	Unbonded Post-Tensioned Concrete
03700	Latex Modified Concrete and Mortar
03720	Trowel Applied Mortar
03730	Silica Modified Concrete
07100	Waterproofing System
079233	Joint Sealants
07950	Expansion Joint Assemblies

Drawings

R-001	General Notes, Sheet Index, and Legend
R-101	Partial Lower & Ground Level Floor Plans
R-102	Level 1 & Level 2 Floor Plans
R-103	Level 3 & Level 4 Floor Plans
R-104	Level 5 & Level 6 Floor Plan
R-105	Partial Top Level Floor Plan

Work Item Details (3.01 – 35.3.0)

NOTICE OF PUBLIC HEARING ON PLANS, SPECIFICATIONS, FORM OF CONTRACT, AND ESTIMATED COSTS FOR THE CONSTRUCTION OF THE 2016 RIVERS LANDING PARKING FACILITY REPAIRS PROJECT, 419 DOUGLAS STREET (PROJECT NO. 6864-728-012) IN SIOUX CITY, IOWA, AND TAKING BIDS THEREON.

A public hearing will be held before the Sioux City City Council in the Council Chambers, Room 504, City Hall, 405 Sixth Street, Sioux City, Iowa, on March 28, 2016 commencing at 4:00 P.M., Local Time, on the proposed plans, specifications, and form of contract, and estimate of costs in the amount of $225,000.00 (the construction documents) for the construction of the 2016 Rivers Landing Parking Facility Repairs Project in Sioux City, Iowa (the project). At said hearing, the City Council will receive and consider any objections made by any interested party to said construction documents.

Sealed bids will be received by the City Clerk at the Customer Service Center located on First Floor in City Hall, 405 Sixth Street, in said City, until 1:00 P.M., Local Time, April 5, 2016, for the construction of the project, as described in the construction documents. The work involves: structural concrete restoration, concrete waterproofing and other work at 419 Douglas Street.

Bids received will be opened and tabulated at a public meeting, presided over by a City Engineer, in the 4th Floor Clock Tower Conference Room in the Public Works Department, Room 409, City Hall, at 1:00 P.M., Local Time, on April 5, 2016. Thereafter, bids will be acted upon by the City Council at such time and place as may be fixed.

Each bid must be made on a form furnished by the City and must be accompanied by a bid bond, a cashier's check or certified check of an Iowa bank or a bank chartered under the laws of the United States, or a certified share draft drawn on a credit union in Iowa or chartered under the laws of the United States, in an amount equal to ten percent (10%) of the amount of the bid, made payable to the City Treasurer of the City of Sioux City, Iowa. The check or draft may be cashed by the City Treasurer as liquidated damages in the event the successful bidder fails to enter into a contract within the ten (10) days after notice of award and post bond satisfactory to the City ensuring the faithful fulfillment of the contract.

Failure to submit a fully completed Bidder Status Form and Worksheet with the bid may result in the bid being deemed nonresponsive and rejected.

The contract will be awarded to the lowest responsive, responsible bidder. However, the City reserves the right to reject any or all bids, readvertise for new bids and to waive informalities that may be in the best interest of the City. By virtue of statutory authority, a preference will be given to products and provisions grown and coal produced within the state of Iowa and to Iowa domestic labor.

The work on this project shall begin upon receipt of the Notice to Proceed and be fully completed by August 13, 2016.

Specifications for this project shall be the 2016 version of the Iowa Statewide Urban Standard Specifications for Public Improvements modified in accordance with the 2015 City of Sioux City Supplement.

Copies of said construction documents are available at the office of the City Clerk of Sioux City for examination by the public. The documents are also available for viewing by the public, or sub-contractors, or suppliers, on the City's Engineering website, under the Projects Out to Bid

tab (https://sioux-city.org/engineering). Construction documents for private use, or potential prime contractors may be obtained from the Engineering Division, City Hall, upon deposit of fifteen dollars ($15) for each set. The deposit will be returned to depositor if the construction documents are returned in good condition within fourteen (14) days from date of award. **Contractors intending to bid as the prime contractor must obtain a hard copy of the plans, specifications and form of contract from the Engineering Division. Failure to obtain a hard copy may result in the bid being deemed nonresponsive and rejected.**

/s/ Lisa L. McCardle,
City Clerk of the City of Sioux City, Iowa

Publish in the Sioux City Journal March 19, 2016 and March 26, 2016.

Instruction to Bidders

1. QUALIFICATION OF THE BIDDERS

A. The bidder must be qualified by experience, financing, and equipment to do the work described in the contract documents. Whenever required in the special provisions, the bidder shall furnish a statement of its construction experience and its general ability to perform the work contemplated, and shall submit same along with its proposal.

B. The City shall have the right to take such action as it may deem necessary in determining the ability of the bidder to perform the work satisfactorily. The City reserves the right to reject any bid that is not responsive to the proposal form or contract documents, or not submitted by a responsive, responsible bidder.

C. Upon request of the Engineer, the bidder, whose bid is under consideration for award of a contract, shall submit evidence of its financial resources, construction experience, and organization available for performance of the proposed work. A bidder's inability to promptly secure the required bonds and insurance coverages for the proposed work, as well as the bidder's demonstrated inability to continuously maintain insurance coverages on past projects, may be considered an indication of financial responsibility and the bidder's qualification as a responsive, responsible bidder.

D. Disqualification of Bidders – Any one or more of the following causes may be considered as sufficient for the disqualification of the bidder and the rejection of the bid or bids:

1. More than one bid for the same work from an individual, firm, partnership or corporation under the same or different names.
2. Evidence of collusion among bidders. Participants in such collusion may receive no recognition as bidders for any further work.
3. Lack of responsibility as shown by past work judged from the standpoint of workmanship and progress, including projects with liquidated damages being assessed.
4. Incomplete work which in the judgment of the City Council might hinder or prevent the prompt completion of additional work, if awarded.
5. For being in arrears on existing contracts, in litigation with the City, or having defaulted on a previous contract.
6. The attention of bidders is directed to Chapter 553, Code of Iowa, regarding unlawful combinations in making public contracts.

2. CONTENTS OF THE PROPOSAL FORMS

A. Each prospective bidder will be furnished with a proposal form showing the location and description of the proposed work, the approximate quantities of work to be performed for which bid prices are requested, and the completion provisions. The contract documents will contain any special provisions that shall apply to the work to be performed.

B. The purpose of the contract documents is to require the furnishing of highest quality equipment, material, and workmanship, and best accepted construction practice. The bidder is expected to base its bid on materials and equipment complying fully with the contract documents. Each bidder, in submitting its bid, acknowledges its willingness to comply with the terms of these contract documents.

3. QUANTITIES AND UNIT PRICES

A. Bidders shall submit a lump sum bid or unit bid price, as required by the proposal for the work covered by the contract documents. Prices shall cover complete work and include all costs incidental thereto.

B. When unit prices are requested in the proposal form, the quantities indicated on the proposal form are approximate only, and do not constitute a warranty or guarantee by the City as to the actual quantities involved in the work. Such quantities are to be used for the purpose of

comparison of bids and determining the amount of bid security, contract, and performance, payment, and maintenance bond. In the event of discrepancies between unit prices and unit price extensions listed in a bidder's proposal, unit prices shall govern and unit price extensions shall be corrected, as necessary, for agreement with unit prices. The City expressly reserves the right to increase or decrease the quantities during construction as outlined in General Conditions, Section 11.2 – Changes and Increased or Decreased Quantities of Work, and to make reasonable changes in design, provided such changes do not materially change the intent of the contract. The amount of work to be paid for shall be based upon the actual quantities performed.

C. The proposal may have a lump sum item for mobilization. The bidder will indicate its bid price in dollars, and this will be the contract price for mobilization.

D. Materials, equipment, or labor essential for the proper completion of the work that are not specified as bid items in the contract documents and are incidental, and the cost of which shall be included in other bid items.

4. EXAMINATION OF THE CONTRACT DOCUMENTS AND SITE OF WORK

A. By submission of a proposal on the work, the bidder represents that it has carefully examined the site of the proposed work; the plans, specifications, and all other contract documents; and that the bidder is fully informed concerning the requirements of the contract, the physical conditions to be encountered in the work, and the character, quality, and the quantity of work to be performed, as well as materials to be furnished. The Contractor will not be entitled to additional compensation if it subsequently finds that conditions require methods or equipment other than that anticipated by the Contractor in making its proposal.

B. The attention of the bidder is directed to the fact that contracts for work, other than the proposed work, may have been awarded or may be awarded in the future. Completion of the proposed work may be contingent upon certain work by others or covered by other contracts being performed on the project in advance of this work; likewise, completion of work by others or covered by other contracts may be dependent upon completion of the proposed work. The bidder is expected to become familiar with work already in progress or previously let on this project, the contract periods, the progress being made, and any other conditions regarding work that may affect the bid or the bidder's performance under this contract.

C. The bidder on this work acknowledges the facts set out in the proceeding paragraph and agrees it is in the public interest to have the work of other contracts and agencies performed concurrently rather than consecutively. The bidder further agrees to cooperate and coordinate the work with other contractors or agencies to the mutual interest of all parties doing work on the project.

D. By the submission of a bid on this work, the bidder acknowledges and agrees, investigation and inquiry has been made regarding the contracts for work with which this work must be coordinated. In the event disputes arise between contractors or other agencies doing work on the project as to their mutual rights or obligations, the Engineer will define the rights of all interested parties regarding the work.

E. The City does not warrant, impliedly or explicitly, the nature of the work, the conditions that will be encountered by the bidder, the adequacy of the contract documents for the Contractor to perform the work, or the conditions or structures to be encountered under any surface. Any such data supplied on the plans or other contract documents, or interpretation thereof by the Engineer, are merely for the convenience of the prospective bidders, who are to rely upon their own explorations of latent or subsurface site conditions, before completing and filing their proposal.

5. INTERPRETATION OF THE CONTRACT DOCUMENTS

All questions about the meaning or intent of the bidding documents shall be submitted to the Engineer in writing. Interpretations or clarifications considered necessary by the Engineer in response to such questions will be issued by Addenda, via the contact information provided on the plan holder's list. Questions received less than seven (7) days prior to the date for opening bids may not be answered. Only answers issued by Addenda will be binding. Oral and other interpretations or clarifications will be without legal effect.

6. ADDENDUM

Each bidder will receive a notice of addendum for any changes in the contract documents made prior to the time established for the receipt of bids. The notice will be delivered in the manner chosen by the City via the contact information provided on the plan holder's list to the bidders with an acknowledgement of receipt required. Acknowledgement of the receipt of the addendum will be as provided in the proposal form.

7. PREFERENCE FOR LABOR AND MATERIALS

A. By virtue of statutory authority, preference will be given to products and provisions grown and coal produced within the State of Iowa, and to Iowa domestic labor, to the extent lawfully required under Iowa Code Chapter 73.

B. Such preferences will not be given where funding requirements, federal or otherwise, prohibit the giving of such preferences.

8. TAXES

A. **Sales and Use Tax:**

The bidder shall not include any form of sales or use tax in the bid. The City will facilitate the issuance of the tax certificates for the contractor and subcontractors. No materials shall be bought before obtaining this certificate.

All contractors and subcontractors shall submit the following information, on or prior to the pre-construction meeting, to the Public Works Department/Engineering Division to obtain the sales tax exemption certificate. The information required for this is:

- Company name
- Company contact
- Full address
- Phone number
- Fax number
- Tax ID number
- Email address

Materials cannot be purchased until this certificate is supplied to both the prime and subcontractors. The tax exemption certificate will be issued to the prime contractor along with all subcontractors as soon as possible after the City Council approves the contracts, and the information is provided by the Contractor. The Notice to Proceed shall not be issued until the certificates are obtained. This does not apply to IDOT projects or material bought outside the state of Iowa.

B. **Income Tax Deduction on Nonresident Contractors**

The bidder who is awarded the contract will be subject to payment of Iowa income tax on income from this work in amounts prescribed by law. If such bidder is a non-Iowa partnership, individual or association, it shall furnish evidence, prior to execution of contract, that bond or securities have been posted with State of Iowa Tax Commission, as provided in Section 422.17, Code of Iowa, releasing City from withholding any and all sums required by provision of Section 422.17, Code of Iowa.

9. PREPARATION OF THE BID PROPOSAL

A. **Bid Proposal:** Bid proposals shall be legibly written in ink or typed on the forms provided by the City and shall be completely executed by the bidder with the requisite full signatures. The bidder must indicate in the proposal whether the proposal is submitted by an individual, partnership, joint venture, limited liability company, or a corporation. If the proposal is submitted by an artificial entity, it must be executed by an officer of such entity with authority to bind such bidder to perform the contract upon award. The business address of the bidder shall be typed or printed on the proposal. If the bidder does not qualify as a resident bidder, the nonresident bidder shall specify on the project proposal whether any preference to resident bidders, including but not limited to any preference to bidders, the imposition of any type of labor force preference, or any other form of preferential treatment to bidders or laborers from that state or foreign country is in effect in the nonresident bidder's state or country of domicile at the time of a bid submittal.

B. **Unit Price Attachment:** The Engineer will allow the bidder to submit a computer-generated attachment, hereinafter referred to as unit price attachment, in lieu of completing that portion of the proposal identifying the bid items, description, unit, quantity, and unit prices.

1. If a unit price attachment is submitted, it shall be attached to the proposal and shall include the following minimum information at the top of each page: project title, letting date, bidder's company name.

2. The unit price attachment shall have the same columns as the proposal; e.g. item number, description, unit, quantity, unit price, bid amount, etc. for each item. The bid item numbers and order on the unit price attachment shall follow that of the proposal.

3. The total amount bid shall be entered below the last bid item on the unit price attachment.

4. The unit price attachment page and print size shall be approximately the same as the proposal. Solid lines for separating the columns and lines need not be printed. Pages should be numbered by page number of the total pages (e.g. Page 1 of 4).

5. The bidder's company name, as well as the authorized person signature, name, and title, shall be in ink and shall follow the total amount bid; and shall be the same person that signs the proposal.

6. In case of discrepancy in the item number, description, unit, or quantity between the unit price attachment and the proposal, the proposal shall govern. The unit price shown on the unit price attachment shall govern.

7. The bidder is solely responsible for the content, completeness, and accuracy of all the information contained in the unit price attachment. If the information in the unit price attachment is incomplete, the bid must be considered incomplete and be rejected.

8. When evaluating and tabulating the bids, the City shall utilize only the unit price as shown on the unit price attachment, and the item number, description, unit, and quantity as shown on the proposal.

C. The bidder, as a business organization, shall comply with the requirements of SUDAS Section 1070, 1.11 - Business Organization Requirements.

D. When unit prices are requested, they shall be submitted on each and every item of work included for which bids are requested. The format for unit prices will be in dollars and whole cents only. In case of discrepancy, the unit price figures shall govern.

10. BIDDERS CERTIFICATION

By the submission of its proposal, the bidder certifies its bid is genuine and is not made in the interest of, or on behalf of, any undisclosed person, firm, or corporation; the bidder has not directly or indirectly induced or solicited any other bidder to put in a false or sham bid; the bidder has not solicited or induced any person, firm, or corporation to refrain from bidding; and the bidder has not sought, by collusion or otherwise, to obtain for itself any advantage over any other bidder or over the City.

11. IRREGULAR AND NONRESPONSIVE PROPOSALS

A. Proposals will be considered irregular and may be rejected for any unauthorized changes in the proposal form or for any of the following reasons:

1. If submitted on a form other than that furnished by the City or the Unit Price Attachment, or if the form is altered or any part thereof is detached or missing;

2. If the bidder submits an obviously unbalanced bid. An unbalanced bid shall be defined as a bid containing lump sum prices or unit bid prices that do not reflect reasonable actual costs plus a reasonable proportionate share of the bidder's anticipated profit, overhead costs, and other indirect costs to complete that item;

3. If the proposal does not contain a unit price for each pay item listed, except in the case of authorized alternate pay items; or

4. If the bidder submits more than one proposal for the same work under the same or different names.

B. Proposals will be considered nonresponsive and shall be rejected for any of the following reasons:

1. If there are unauthorized additions, conditional or alternate bids, or irregularities of any kind that may tend to make the proposal incomplete, indefinite, or ambiguous as to its meaning;

2. If the bidder adds any provisions reserving the right to accept or reject an award or to enter into contract pursuant to an award;

3. If a bid on one project is tied to a bid on any other project, except as specifically authorized on the proposal form by the City;

4. If the bidder makes corrections or alterations to the unit prices it submits and such corrections or alterations are not initialed by the bidder. The City may require the bidder to identify any corrections or alteration so initialed;

5. If the bidder makes any omission of prices on items shown on the proposal forms, or any addition in writing to the form of the bid, or any condition or limitation on its proposal.

6. If the bid is accompanied by an unacceptable bid security.

C. If the bidder notes a requirement in the contract documents it believes will require a conditioned or unsolicited alternate bid, it shall immediately notify the Engineer in writing identifying such requirement. If the Engineer finds that such a requirement does exist in the contract documents, the City will make corrections thereto by an addendum.

D. Proposals will be evaluated by the City pursuant to the provisions of Approval for Award and Award of Contract, Section 1 - Acceptance or Rejection of Proposals.

12. SUBMISSION OF THE BID, IDENTITY OF BIDDER, AND BID SECURITY

A. The bid shall be sealed in an envelope, properly identified as the proposal with the project title and the name and address of the bidder, and deposited with the City at or before the time and at the place provided in the Notice of Public Hearing. It is the sole responsibility of the bidder to see its proposal is delivered to the City prior to the time for opening bids, along with the appropriate bid security sealed in the separate envelope identified as bid security and attached to the outside of the bid proposal envelope. Any proposal received after the scheduled time for the receiving of proposals will be returned to the bidder unopened and will not be considered. If the City provides envelopes for proposals and bid security, bidders shall be required to utilize such envelopes in the submission of their bids.

B. A corporation, limited liability company, or limited partnership shall bid in the name under which it is registered with the Iowa Secretary of State. A partnership shall bid in the name under which it is registered with the County recorder. An individual operating under a trade name shall bid using the trade name registered with the County recorder if such registration is required. The bidder's exact name as registered, if required, shall appear as the "principal" on any bid bond and shall appear on any cashier's check or share draft submitted to fulfill the bid security requirement. A bidder's failure to satisfy these requirements may be grounds for rejection of the bidder's proposal.

13. WITHDRAWAL OF BIDS

A. A bidder may request, without prejudice, to withdraw its proposal after it has been deposited with the City, provided such request is made in writing to the City prior to the time set for receiving proposals.

B. Modifications or corrections to proposals may be made on the withdrawn proposal, provided such modifications or corrections are initialed by the Bidder and are received by the City prior to the time set for receiving proposals. Modifications or corrections to a proposal will not be accepted if the modifications or corrections render the bid security inadequate or if not accompanied by sufficient additional bid security.

C. If a bidder has requested in writing to withdraw its proposal, said bidder may submit a different proposal and bid security at that time or any time prior to the time set for receiving proposals.

D. If, within 24 hours after bids are opened, any bidder files a duly signed written notice with the City and promptly thereafter demonstrates to the reasonable satisfaction of the City that there was a material and substantial mistake in the preparation of its bid, that bidder may withdraw its bid and the bid security will be returned. Thereafter, if the work is rebid, that bidder will be disqualified from further bidding on the work.

14. OPENING OF BIDS

At the time and place set forth in the Notice of Public Hearing, proposals will be opened and read aloud. Proposals will be rejected if not accompanied by a bid security submitted in a separate, marked envelope. Submittals that do not include acknowledgement of each addendum to the contract

documents will be rejected, except in those instances, in the opinion of the Engineer, where the addendum not acknowledged by a bidder will have no effect on the bid amount. Bid openings will be open to the public.

15. NONDISCRIMINATION AND AFFIRMATIVE ACTION

The bidder will be required to assure the City that the bidder will not in the performance of the work specified herein discriminate against any person based upon the person's age, race, creed, color, sex, nation origin, religion, sexual orientation, gender identity, pregnancy, mental disability, physical disability, union or association membership or office therein. The bidder will also be required to submit to the City an affirmative action program.

16. BIDDER STATUS FORM

The bidder is required to complete the Bidder Status Form, and Worksheet: Authorization to Transact Business form, as provided in these documents. Failure to submit a fully completed Bidder Status Form and Worksheet with the bid may result in the bid being deemed nonresponsive and rejected.

APPROVAL FOR AWARD AND AWARD OF CONTRACT

1. ACCEPTANCE OR REJECTION OF PROPOSALS

A. The City reserves the right to accept the proposal that, in its judgment, is the lowest responsive, responsible bid; to award the contract by sections, if so specified in Special Provisions; to reject any or all proposals; to reject irregular or nonresponsive proposals as defined in Instruction to Bidder, Section 1.11 - Irregular and Nonresponsive Proposals; and to waive irregularities and/or technical deficiencies in the proposals to the extent allowed by law.

B. An individual, firm, partnership, corporation, or any association under the same or different names shall not submit more than one proposal. When reasonable evidence exists that indicates that a bidder has submitted more than one proposal at any letting for the same work under the same or different names, said proposals may be rejected.

C. Any or all proposals may be rejected if there is reason to believe collusion exists among bidders. Proposals received from participants in such collusion may not be considered for the same work if re-advertised.

D. Proposals may be rejected if the bidder has failed to promptly meet financial obligations undertaken in connection with other work under contract, or is in default on a previous contract with the City, or has an unsatisfactory record of performance and cooperation on any such previous contract with the City, or has failed to maintain satisfactory progress on work already under contract with the City.

E. In the event the bid specifies the use of materials, workmanship, methods, or equipment not in conformance with the contract documents, the bid will be rejected. In the event the bid was based on, but did not specify, the use of materials, workmanship, methods, or equipment not in conformance with the contract documents, the bidder will be held responsible for furnishing or using materials, workmanship, methods, and equipment in conformance with the contract documents at no change in the bid price.

F. When a contract for a public improvement is to be awarded to the lowest responsible bidder, a resident bidder shall be allowed a preference as against a nonresident bidder from a state or foreign country if that state or foreign country gives or requires any preference to bidders from that state or foreign country including but not limited to any preference to bidders, the imposition of any type of labor force preference, or any other form of preferential treatment to bidders or laborers from that state or foreign country. The preference allowed shall be equal to the preference given or required by the state or foreign country in which the nonresident bidder is a resident. In the instance of a resident labor force preference, a nonresident bidder shall apply the same resident labor force preference to a public improvement in this state as would be required in the construction of a public improvement by the state or foreign country in which the nonresident bidder is a resident.

G. Promptly after the proposals are opened and evaluated, the City shall give careful consideration to its needs, available funding, and other project considerations; and shall either designate the lowest responsive, responsible bidder and proceed with award of contract, or reject all bids and reconsider the project.

2. RELEASE OF BID SECURITY

A. After the City's approval of the contract executed by the lowest bidder, the City shall promptly release the bid security of all bidders, or within thirty days of the bid opening, whichever is sooner. If all bids are rejected, all bid security will be promptly released.

B. Bid security shall be released to bidders, either by making such bid security available for retrieval by bidders, or, if requested by a bidder, by mailing the bid security to the bidder.

3. AWARD OF CONTRACT

A. **Contract Document Submittal:** Within 10 calendar days after notification by the Engineer, unless otherwise provided in the contract documents, the Contractor shall sign, leaving all the dates blank, executed contract documents, including contract, performance, payment, and maintenance bond; certificate of insurance; and all other items required by the contract documents. The performance, payment, and maintenance bond and insurance certificate shall meet the requirements of Section 1070, Part 3 - Bonds and Insurance as required by the City. The City will thereupon receive and file such documents and award the contract.

B. **Deferred Award:** The City reserves the right to defer award of any contract for a period not to exceed 30 calendar days from the date of opening of proposals. No claims for compensable delay shall arise as the result of delay in the approval of award.

C. **Failure to Execute the Contract:** It is agreed by the bidder that upon its failure to enter into the contract and furnish the necessary insurance certificate and performance, payment and maintenance bond within 10 calendar days after notification by the City, the amount of the bidder's bid security may at the City's option be forfeited and shall become the property of the City, to be retained not as a penalty, but as liquidated damages. The award of the contract may then, at the discretion of the City, be made to the next lowest responsive, responsible bidder, or the work may be re-advertised or may be constructed by the City in any legal manner.

D. Disclosure of Subcontractors:

1. The lowest responsive, responsible bidder shall file a list of the names and subcontract amounts of all subcontractors who are expected to work on the project on the form provided in the contract documents at the time of bid.

2. If, after award of the contract, a subcontractor is replaced, or the subcontract price or the work under the subcontract is changed, the bidder shall disclose the name of the new subcontractor, the revised subcontract price, or the change in the scope of subcontract work. If a new subcontractor is added after award of the contract, the Contractor shall disclose the name of the new subcontractor.

Title VI – Regulations Compliance

During the performance of this contract, the contractor, for itself, its assignees and successors in interest (hereinafter referred to as the "contractor") agrees as follows:

1. Compliance with Regulations: The contractor shall comply with the Regulations relative to nondiscrimination in Federally assisted programs of the Iowa Department of Transportation (hereinafter referred to as the Iowa DOT) 49 CFR 21, as they may be amended from time to time, (hereinafter referred to as the Regulations), which are herein incorporated by reference and made a part of this contract.

2. Nondiscrimination: The contractor, with regard to the work performed by it during the contract, shall not discriminate on the grounds of race, color, national origin, sex, age, or disability in the selection and retention of subcontractors, including procurement of materials and leases of equipment. The contractor shall not participate either directly or indirectly in the discrimination prohibited by section 21.5 of the Regulations, including employment practices when the contract covers a program set forth in Appendix B of the Regulations.

3. Solicitations for Subcontracts, Including Procurement of Materials and Equipment: In all solicitations either by competitive bidding or negotiation made by the contractor for work to be performed under a subcontract, including procurement of materials or leases of equipment, each potential subcontractor or supplier shall be notified by the contractor of the contractor's obligations under this contract and the Regulations relative to nondiscrimination on the grounds of race, color, national origin, sex, age, or disability.

4. Information and Reports: The contractor shall provide all information and reports required by the Regulations or directives issued pursuant thereto, and shall permit access to its books, records, accounts, other sources of information, and its facilities as may be determined by the Iowa DOT or Federal Highway Administration (FHWA) to be pertinent to ascertain compliance with such Regulations, orders and instructions.

5. Where any information required of a contractor is in the exclusive possession of another who fails or refuses to furnish this information, the contractor shall so certify to the Iowa DOT or the FHWA as appropriate, and shall set forth what efforts it has made to obtain the information.

6. Sanctions for Noncompliance: In the event of the contractor's noncompliance with the nondiscrimination provisions of this contract, the Iowa DOT shall impose such contract sanctions as it or the FHWA may determine to be appropriate, including, but not limited to:
   - withholding payments to the contractor under the contract until the contractor complies, and/or
   - cancellation, termination or suspension of the contract, in whole or in part.

7. Incorporation of Provisions: The contractor shall include the provisions of paragraphs (1) through (6) in every subcontract, including procurement of materials and leases of equipment, unless exempt by the Regulations, or directives issued pursuant thereto. The contractor shall take such action with respect to any subcontract or procurement as the Iowa DOT or the FHWA may direct as a means of enforcing such provisions including sanctions for non-compliance, provided, however, that, in the event a contractor becomes involved in, or is threatened with, litigation with a subcontractor or supplier as a result of such direction, the contractor may request the Iowa DOT to enter into such litigation to protect the interests of the Iowa DOT and, in addition, the contractor may request the United States to enter into such litigation to protect the interests of the United States.

BID FORM

BID OF _____,
(Name of Bidder) (City) (State)

herein called "Bidder", for the construction of 2016 Rivers Landing Parking Facility Repairs Project in Sioux City, Woodbury County, Iowa.

Bidder proposes to furnish all necessary machinery, equipment, tools, labor, and other means of construction, and to furnish all materials specified in the manner and time prescribed and to do all the work at the prices herein set out. This Bid is filed with the understanding that payment will be made to Bidder in monthly estimates and one final payment in the manner set forth in the 2016 Iowa Statewide Urban Design and Specifications (SUDAS), and the 2015 Sioux City Supplement to SUDAS. Bidder encloses herewith bid security in the amount of _____ Dollars ($_____) as a Bid guarantee which it is understood will be retained in the event the formal contract and/or contractor's bond and any other documents are not executed or provided if award is made to the undersigned bidder. It is understood that the City Council may retain the Bid for a period of thirty (30) days from and after the established date for receiving bids.

The Bidder hereby acknowledges that all addenda become a part of the contract documents when issued, and that each such addendum has been received and utilized in the preparation of this bid. The Bidder hereby acknowledges receipt of the following addenda by inserting the number of each addendum in the blanks below:

ADDENDUM NUMBER _____ ADDENDUM NUMBER _____

ADDENDUM NUMBER _____ ADDENDUM NUMBER _____

and certifies that said addenda were utilized in the preparation of this bid.

The Bidder hereby certifies:

1. That this bid is not affected by, contingent on, or dependent on any other bid submitted for any improvement with the City; and

2. That no individual employed by the Bidder has employed any person to solicit or procure the work on this project, nor will any employee of the bidder make any payment or agreement for payment of any compensation in connection with the procurement of this project; and

3. That no part of the bid price received by the Bidder was or will be paid to any person, corporation, firm, association, or other organization for soliciting the bid, other than the payment of their normal compensation to persons regularly employed by the Bidder whose services in connection with the construction of the project were in the regular course of their duties for the Bidder; and

4. That this bid is genuine and not collusive or sham; that the Bidder has not colluded, conspired, connived or agreed, directly or indirectly, with any bidder or person, to submit a sham bid or to refrain from bidding, and has not in any manner, directly or indirectly, sought, by agreement or conclusion, or communication or conference, with any person, to fix the bid price of the Bidder or of any other bidder, and that all statements in this bid are true; and

5. That the Bidder does hereby certify to the City of Sioux City that in the performance of the work specified herein, no person shall in any way be favored or discriminated against because of the person's age, race, creed, color, sex, national origin, religion, sexual orientation, gender identity, pregnancy, mental disability, physical disability, union or association membership or office therein.

6. That the individual(s) executing this bid have the authority to execute this bid on behalf of the bidder.

7. ☐ Check if bidder is using and has attached to this bid form, a computer generated substitute personal Bid Items, Quantities and Prices form for this project and that you certify it complies with the Special Provisions.

Bidder agrees:

1. To do all "Extra Work" which may be required to complete the work contemplated at a cost to be determined in accordance with the contract documents..

2. That the terms and provisions of the Notice of Public Hearing, the Instructions to Bidders, and the Bid Bond are a part of this "Bid Form" as if fully set forth herein.

3. That, if the bid is accepted, to execute the contract and provide a bond and insurance and other documents as required by the bid documents.

4. To commence the work on this project on or before a date to be specified in a written Notice to Proceed by the City, and to complete the project with a completion date of August 13, 2016; and to pay liquidated damages for noncompliance with said completion provisions at the rate of Two hundred fifty dollars ($250) for each day thereafter that the work remains incomplete.

The Bidder shall indicate whether the bid is submitted by a/an:

☐ Individual, Sole Proprietorship

☐ Partnership

☐ Corporation

☐ Joint-venture: all parties must join in and execute all documents

☐ Other

The bidder shall enter its Public Registration Number _____-_____ issued by the Iowa Commissioner of Labor pursuant to Section 91C.5 of the Iowa Code.

_____
Bidder

_____
Signature

By: _____
Name (Print/Type)

_____
Title

_____
Street Address

_____
City, State, Zip Code

_____
Telephone Number

NOTE: The signature on this bid must be an original signature in ink; copies or facsimile of any signature will not be accepted.

NOTE: The Contractor is also required to submit Pages C-3 through C-9 with their bid submittal. Failure to do so may deem the bid as non-responsive.

BID ITEMS, QUANTITIES AND PRICES FOR
2016 RIVERS LANDING PARKING FACILITY REPAIRS PROJECT

This is a UNIT BID PRICE CONTRACT. The bidder must provide the Unit Bid Price, the Total Bid Price, any Alternate Price(s), and the Total Construction Cost; in case of discrepancy, the Unit Bid Price governs. The quantities shown on this Attachment - Bid Items, Quantities, and Prices are approximate only, but are considered sufficiently adequate for the purpose of comparing bids. The total Construction Cost plus any alternate selected by the City shall be used only for comparison of bids. The Total Construction Cost, including any Alternates, shall be used for determining the sufficiency of the bid security.

Item	Work Item	Description	Quantity	Unit	Price	Total
1	1.1	Project Mobilization	1	L.S.	$	$
2	1.2	Concrete Formwork			Incidental	Incidental
3	1.3	Concrete Shores and Reshores			Incidental	Incidental
4	1.4	Concrete Reinforcement			Incidental	Incidental
5	1.5	Temporary Signage			Incidental	Incidental
6	3.3	Floor Repair - Partial Depth	2400	S.F.	$	$
7	3.4	Floor Repair – Full Depth	470	S.F.	$	$
8	3.5	Floor Repair – Full Depth at P/T Repair	60	S.F.	$	$
9	3.6	Floor Repair – Full Depth at P/T Repair with Curb	60	S.F.	$	$
10	4.1	Ceiling Repair - Partial Depth	0	S.F.	$	$
11	11.1	Seal Cracks and Joints			Incidental	Incidental
12	11.2	Repair Crack / Joint Sealant			Incidental	Incidental
13	16.3A	Traffic Topping – Recoat (Complete System) at repairs			Incidental	Incidental
14	16.3B	Traffic Topping – Recoat (Complete System)	230	S.F.	$	$
15	16.11	Traffic Topping – Recoat (Wear & Top System)	14,000	S.F.	$	$
16	21.2	Protect Exposed P/T Tendons			Incidental	Incidental
17	21.3	Replace P/T (Live) End Anchorage	1	EA.	$	$
18	21.4	Replace P/T (Dead) End Anchorage	1	EA.	$	$
19	21.6	Tendon Splice Coupling (Center-Pull)	1	EA.	$	$
20	21.7	Tendon Splice Coupling (Single)	1	EA.	$	$
21	21.8	P/T Tendon Material	35	L.F.	$	$
				Total		**$**

NOTE: It is understood that the above quantities are estimated for the purpose of this bid. All quantities are subject to revision by the City. Quantity changes which amount to twenty percent (20%) or less of the total bid shall not affect the unit bid price.

LIST OF MAJOR SUBCONTRACTORS AND SUPPLIERS

PROPOSED SUBCONTRACTORS/SUPPLIERS

If none, write none: _____

Item(s)	Proposed Subcontractor/Supplier (Name)

This is to certify that the names of the foregoing mentioned Subcontractors or material suppliers are submitted with full knowledge and consent of the respective parties.

Bidder: _____
(Name of Company)

By: _____
(Signature and Title)

Date: _____

Note: This sheet may be reproduced by the Contractor to list additional Subcontractors or Suppliers. Certify each sheet as an original sheet and staple additional sheets to this page.

Bidder Status Form

To be completed by all bidders — Part A

Please answer "Yes" or "No" for each of the following:

☐ Yes ☐ No My company is authorized to transact business in Iowa.
(To help you determine if your company is authorized, please review the worksheet on the next page).

☐ Yes ☐ No My company has an office to transact business in Iowa.

☐ Yes ☐ No My company's office in Iowa is suitable for more than receiving mail, telephone calls, and e-mail.

☐ Yes ☐ No My company has been conducting business in Iowa for at least 3 years prior to the first request for bids on this project.

☐ Yes ☐ No My company is not a subsidiary of another business entity or my company is a subsidiary of another business entity that would qualify as a resident bidder in Iowa.

If you answered "Yes" for each question above, your company qualifies as a resident bidder. Please complete Parts B and D of this form.

If you answered "No" to one or more questions above, your company is a nonresident bidder. Please complete Parts C and D of this form.

To be completed by resident bidders — Part B

My company has maintained offices in Iowa during the past 3 years at the following addresses:

Dates: _____ /_____ /_____ to _____ /_____ /_____ Address: _____

City, State, Zip: _____

Dates: _____ /_____ /_____ to _____ /_____ /_____ Address: _____

City, State, Zip: _____

Dates: _____ /_____ /_____ to _____ /_____ /_____ Address: _____

You may attach additional sheet(s) if needed. City, State, Zip: _____

To be completed by non-resident bidders — Part C

1. Name of home state or foreign country reported to the Iowa Secretary of State:

_____

2. Does your company's home state or foreign country offer preferences to bidders who are residents? ☐ Yes ☐ No

3. If you answered "Yes" to question 2, identify each preference offered by your company's home state or foreign country and the appropriate legal citation.

_____

_____

You may attach additional sheet(s) if needed.

To be completed by all bidders — Part D

I certify that the statements made on this document are true and complete to the best of my knowledge and I know that my failure to provide accurate and truthful information may be a reason to reject my bid.

Firm Name: _____

Signature: _____ Date: _____

You must submit the completed form to the governmental body requesting bids per 875 Iowa Administrative Code Chapter 156.
This form has been approved by the Iowa Labor Commissioner.

309-6001 02-14

Worksheet: Authorization to Transact Business

This worksheet may be used to help complete Part A of the Resident Bidder Status form. If at least one of the following describes your business, you are authorized to transact business in Iowa.

☐ Yes ☐ No	My business is currently registered as a contractor with the Iowa Division of Labor.
☐ Yes ☐ No	My business is a sole proprietorship and I am an Iowa resident for Iowa income tax purposes.
☐ Yes ☐ No	My business is a general partnership or joint venture. More than 50 percent of the general partners or joint venture parties are residents of Iowa for Iowa income tax purposes.
☐ Yes ☐ No	My business is an active corporation with the Iowa Secretary of State and has paid all fees required by the Secretary of State, has filed its most recent biennial report, and has not filed articles of dissolution.
☐ Yes ☐ No	My business is a corporation whose articles of incorporation are filed in a state other than Iowa, the corporation has received a certificate of authority from the Iowa secretary of state, has filed its most recent biennial report with the secretary of state, and has neither received a certificate of withdrawal from the secretary of state nor had its authority revoked.
☐ Yes ☐ No	My business is a limited liability partnership which has filed a statement of qualification in this state and the statement has not been canceled.
☐ Yes ☐ No	My business is a limited liability partnership which has filed a statement of qualification in a state other than Iowa, has filed a statement of foreign qualification in Iowa and a statement of cancellation has not been filed.
☐ Yes ☐ No	My business is a limited partnership or limited liability limited partnership which has filed a certificate of limited partnership in this state, and has not filed a statement of termination.
☐ Yes ☐ No	My business is a limited partnership or a limited liability limited partnership whose certificate of limited partnership is filed in a state other than Iowa, the limited partnership or limited liability limited partnership has received notification from the Iowa secretary of state that the application for certificate of authority has been approved and no notice of cancellation has been filed by the limited partnership or the limited liability limited partnership.
☐ Yes ☐ No	My business is a limited liability company whose certificate of organization is filed in Iowa and has not filed a statement of termination.
☐ Yes ☐ No	My business is a limited liability company whose certificate of organization is filed in a state other than Iowa, has received a certificate of authority to transact business in Iowa and the certificate has not been revoked or canceled.

309-6001 02-14

AFFIRMATIVE ACTION INFORMATION

The Contractor does hereby certify to the City of Sioux City, Iowa, that no person shall, in any way, be favored or discriminated against because of the person's age, race, creed, color, sex, national origin, religion, sexual orientation, gender identity, pregnancy, mental disability, physical disability, union or association membership or office herein.

If selected as the successful bidder, this Contractor hereby agrees to file a nondiscrimination and equal opportunity statement and/or an Affirmative Action Program.

2016 RIVERS LANDING PARKING FACILITY REPAIRS PROJECT

_____

COMPANY

_____

EXECUTIVE OFFICER

_____

AFFIRMATIVE ACTION OFFICER SIGNATURE

ADDRESS OF THE AFFIRMATIVE ACTION OFFICER

_____

_____

PHONE NUMBER _____

BID BOND

KNOW ALL MEN BY THESE PRESENTS, that we, _____ as Principal, and _____as Surety, are held and firmly bound unto the City of Sioux City, Iowa, hereinafter called the "CITY", in the penal sum of _____Dollars ($_____) lawful money of the United States, for the payment of which sum will and truly be made, we find ourselves, our heirs, executors, administrators, and successors, jointly and severally, firmly by these presents. The condition of this obligation is such that whereas the Principal has submitted the accompanying bid, dated _____, for the construction of the 2016 Rivers Landing Parking Facility Repairs Project, in Sioux City, Iowa**.**

The Surety hereby stipulates and agrees that the obligations of said surety and its bond shall be in no way impaired or affected by any extension of the time within which the City may accept such bid or execute such Contract; and said surety does hereby waive notice of any such extension.

In the event that any actions or proceedings are initiated with respect to this Bond, the parties agree that the venue thereof shall be Woodbury County, State of Iowa. If legal action is required by the City against the Surety or Principal to enforce the provisions of the bond or to collect the monetary obligation incurring to the benefit of the City, the Surety or Principal agrees to pay the City all damages, costs, and attorney fees incurred by enforcing any of the provisions of this Bond. All rights, powers, and remedies of the City hereunder shall be cumulative and not alternative and shall be in addition to all rights, powers, and remedies given to the City, by law. The City may proceed against Surety for any amount guaranteed hereunder whether action is brought against Principal or whether Principal is joined in any such action or actions or not.

NOW, THEREFORE,

(a) If said Bid shall be rejected, or in the alternate,

(b) If said Bid shall be accepted and the Principal shall execute and deliver a contract in the form specified and shall furnish a bond for his faithful performance of said contract, and for the payment of all persons performing labor or furnishing materials in connection therewith, and shall in all other respects perform the agreement created by the acceptance of said Bid, then this obligation shall be void, otherwise the same shall remain in force and effect; it being expressly understood and agreed that the liability of the Surety for any and all claims hereunder shall, in no event, exceed the penal amount of this obligation as herein stated plus any court costs, attorney's fees, and any other expenses of recovery.

By virtue of statutory authority, the full amount of this Bid Bond shall be forfeited to the City in liquidation of damages sustained in the event that the Principal fails to execute the contract and provide the bond as provided in the specifications or by law.

IN WITNESS WHEREOF, the Principal and the Surety have hereunto set their hand and seals, and such of them as are corporations, have caused their corporate seals to be hereto affixed and these presents to be signed by their proper officers on _____.

SURETY:	**PRINCIPAL:**
_____	_____
Surety Company	Bidder
By: _____	By:_____
Attorney-in-Fact/Officer Signature	Signature
_____	_____
Name of Attorney-in-Fact/Officer	Name (Print/Type)
_____	_____
Company Name	Title
_____	_____
Company Address	Address
_____	_____
City, State, Zip Code	City, State, Zip Code
_____	_____
Company Telephone Number	Telephone Number

NOTE: All signatures on this bid bond must be original signatures in ink; copies or facsimile of any signature will not be accepted. This bond must be sealed with the Surety's seal. The Certificate or Power of Attorney accompanying this bond must be valid on its face and sealed with the Surety's seal.

FORM OF CONTRACT

THIS CONTRACT, made on _____ by and between _____ (hereinafter called the "Contractor") and the City of Sioux City, Woodbury County, Iowa, (hereinafter called the "City").

WITNESSETH, that the Contractor and the City, for the consideration stated herein, agree as follows:

ARTICLE I. SCOPE OF WORK – The Contractor shall perform everything required to be performed and shall provide and furnish all of the labor, materials, necessary tools, expendable equipment and complete in a workmanlike manner all the work required in connection with the construction of **2016 Rivers Landing Parking Facility Repairs Project,** in Sioux City, Iowa, all in strict accordance with the 2016 version of the Iowa Statewide Urban Design and Specifications (SUDAS), as further modified by the 2015 revision of the Sioux City Supplement to SUDAS, and Special Provisions included in said contract documents; and in strict compliance with the Contractor's bid and the other contract documents herein mentioned which are a part of this Contract; and the Contractor shall do everything required by this Contract and the other documents constituting a part thereof.

ARTICLE II. THE CONTRACT PRICE – This contract is awarded and executed for completion of the work specified in the contract documents for the bid prices shown on the Contract Attachment: Bid Items, Quantities, and Prices which were proposed by the Contractor in its bid submitted in accordance with the Instructions to Bidders and Notice of Public Hearing. The Contractor agrees to perform said work for and in consideration of the City's payment of the bid amount of _____ which amount shall constitute the required amount of the performance, maintenance, and payment bond. The Contractor hereby agrees to commence work under this contract on or before a date to be specified in a written Notice to Proceed by the City and to complete the project on or before August 13, 2016 and to pay liquidated damages for noncompliance with said completion provisions at the rate of ***Two hundred fifty and 00/00 dollars ($250.00)*** for each day thereafter that the work remains incomplete.

ARTICLE III. PAYMENTS – Payments will be made to the Contractor in accordance with and subject to the provisions embodied in the documents made a part of this Contract.

ARTICLE IV. COMPONENT PARTS OF THIS CONTRACT – This Contract consists of the following component parts, all of which are as fully a part of this Contract as if herein set out verbatim or, if not attached, as if hereto attached:

1. Change Orders
2. Addenda
3. Shop and Working Drawings submitted by the Contractor, when approved by the Engineer
4. This Instrument
5. Special Provisions
6. Plans
7. General Conditions
8. Instruction to Bidders
9. Notice of Public Hearing

10. 2015 version of the Sioux City Supplement to SUDAS
11. 2016 version of the Iowa Statewide Urban Design and Specifications (SUDAS),
12. Contractor's Performance, Maintenance & Payment Bond
13. Contractor's Bid
14. Bidders Status Form
15. Title VI – Regulation Compliance

In the event that any provision in any of the foregoing component parts of this Contract conflicts with any provision in any other of the component parts, the provision in the component part first enumerated shall govern over any other component part which follows it numerically, except as may be otherwise specifically stated.

IN WITNESS WHEREOF, the parties hereto have caused this Instrument to be executed in five original counterparts the day and year first above written.

This Contract, however, shall not be of any validity, force, or effect until it has been approved by the City Attorney, signed by the City Manager and City Clerk and delivered to the Contractor.

_____
Contractor

By: _____

_____
Title

CITY OF SIOUX CITY, IOWA

By: _____
City Manager

(SEAL)

ATTEST: _____
City Clerk

This Contract, the performance and payment bond and supporting insurance documents are approved as to form and content.

By: _____
City Attorney

Date: _____

I hereby certify that the above Contract was authorized by the City Council of the City of Sioux City, Iowa, pursuant to Resolution No. _____ on _____.

By: _____
City Clerk of Sioux City, Iowa

CONTRACT ATTACHMENT:
BID ITEMS, QUANTITIES, AND PRICES FOR

2016 Rivers Landing Parking Facility Repairs Project

THIS CONTRACT IS AWARDED AND EXECUTED FOR COMPLETION OF THE WORK SPECIFIED IN THE CONTRACT DOCUMENTS FOR THE BID PRICES TABULATED BELOW AS PROPOSED BY THE CONTRACTOR IN ITS BID SUBMITTED IN ACCORDANCE WITH INSTRUCTIONS TO BIDDERS AND NOTICE OF PUBLIC HEARING. ALL QUANTITIES ARE SUBJECT TO REVISION BY THE CITY. QUANTITY CHANGES WHICH AMOUNT TO TWENTY PERCENT (20%) OR LESS OF THE AMOUNT BID SHALL NOT AFFECT THE UNIT BID PRICE.

INSERT LIST OF AWARDED BID PRICES HERE.

PERFORMANCE, PAYMENT, AND MAINTENANCE BOND

KNOW ALL MEN BY THESE PRESENTS: That we, the undersigned,_____ _____ as Principal (hereinafter called "Contractor" or "Principal"), and _____, as Surety are held and firmly bound unto the City of Sioux City, Iowa, as Obligee, (hereinafter called "City") and to all persons who may be injured by any breach of any of the conditions of this Bond in the penal sum of _____ Dollars ($_____), lawful money of the United States, for the payment of which sum, well and truly to be made, we bind ourselves, our heirs, legal representatives and assigns, jointly or severally, firmly by these presents.

The conditions of the above obligations are such that whereas said Contractor entered into a contract with the City, bearing the date of _____ (hereinafter the "Contract") wherein said Contractor undertakes and agrees to construct the following described improvements**: 2016 Rivers Landing Parking Facility Repairs Project** and to faithfully perform all the terms and requirements of said Contract within the time therein specified, in a good and workmanlike manner, and in accordance with the Contract Documents.

It is expressly understood and agreed by the Contractor and Surety in this bond that the following provisions are a part of this Bond and are binding upon said Contractor and Surety, to-wit:

1. PERFORMANCE: The Contractor shall well and faithfully observe, perform, fulfill, and abide by each and every covenant, condition, and part of said Contract and Contract Documents, by reference made a part hereof, for the above referenced improvements, and shall indemnify and save harmless the City from all outlay and expense incurred by the City by reason of the Contractor's default of failure to perform as required. The Contractor shall also be responsible for the default or failure to perform as required under the Contract and Contract Documents by all its subcontractors, suppliers, agents, or employees furnishing materials or providing labor in the performance of the Contract.

2. PAYMENT: The Contractor and the Surety on this Bond hereby agree to pay all just claims submitted by persons, firms, subcontractors, and corporations furnishing materials for or performing labor in the performance of the Contract on account of which this Bond is given, including but not limited to; claims for all amounts due for labor, materials, lubricants, oil, gasoline, repairs on machinery, equipment, and tools, consumed or used by the Contractor or any subcontractor, wherein the same are not satisfied out of the portion of the contract price which the City is required to retain until completion of the improvement, but the Contractor and surety shall not be liable to said persons, firms, or corporations unless the claims of said claimants against said portion of the contract price shall have been established as provided by law. The Contractor and Surety hereby bind themselves to the obligations and conditions set forth in Chapter 573, Code of Iowa, which by this reference is made a part hereof as though fully set out herein.

3. MAINTENANCE: The Contractor and the Surety on this Bond hereby agree, at their own expense:

   A. To remedy any and all defects that may develop in or result from work to be performed under the Contract within the period of two years.

   B. To keep all work in continuous good repair; and

   C. To pay the City's reasonable costs of monitoring and inspection to assure that any defects are remedied, and to repay the City all outlay and expense incurred as a result of Contractor's and Surety's failure to remedy any defect as required by this section.

   Contractor's and Surety's agreement herein made extends to defects in workmanship or materials not discovered or known to the City at the time such work was accepted.

4. GENERAL: Every Surety on this Bond shall be deemed and held bound, any contract to the contrary notwithstanding, to the following provisions:

A. To consent without notice to any extension of time to the Contractor in which to perform the Contract;

B. To consent without notice to any change in the Contract or Contract Documents, which thereby increases the total contract price and the penal sum of this bond, provided that all such changes do not, in the aggregate, involve an increase of more than twenty-five percent of the total contract price, and that this bond shall then be released as to such excess increase; and

C. To consent without notice that this Bond shall remain in full force and effect until the Contract is completed, whether completed within the specified contract period, within an extension thereof, or within a period of time after the contract period has elapsed and the liquidated damage penalty is being charged against the Contractor.

The Contractor and every Surety on the bond shall be deemed and held bound, any contract to the contrary notwithstanding, to the following provisions:

A. That no provision of this Bond or of any other contract shall be valid which limits to less than five years after the acceptance of the work under the Contract the right to sue on this Bond.

B. That as used herein, the phrase “all outlay and expense” is not to be limited in any way, but shall include the actual and reasonable costs and expenses incurred by the City including interest, benefits, and overhead where applicable. Accordingly, “all outlay and expense” would include but not be limited to all contract or employee expense, all equipment usage or rental, materials, testing, outside experts, attorneys’ fees (including overhead expenses of the City’s staff attorneys), and all costs and expenses of litigation as they are incurred by the City. It is intended that Contractor and Surety will defend and indemnify the City on all claims made against the City on account of Contractor’s failure to perform as required in the Contract and Contract Documents, that all agreements and promises set forth in the Contract and Contract Documents, in approved change orders, and in this Bond will be fulfilled, and that the City will be fully indemnified so that it will be put into the position it would have been in had the Contract been performed in the first stance as required.

In the event the City incurs any “outlay and expense” in defending itself with respect to any claim as to which the Contractor or Surety should have provided the defense, or in the enforcement of the promises given by the Contractor in the Contract, Contract Documents, or approved change orders, or in the enforcement of the promises given by the Contractor and Surety in this Bond, the Contractor and Surety agree that they will make the City whole for all such outlay and expense, provided that the Surety’s obligation under this bond shall not exceed 125% of the penal sum of this bond.

In the event that any actions or proceedings are initiated with respect to this Bond, the parties agree that the venue thereof shall be Woodbury County District Court, State of Iowa. If legal action is required by the City to enforce the provisions of this Bond or to collect the monetary obligation incurring to the benefit of the City, the Contractor and the Surety agree, jointly and severally, to pay the City all outlay and expense incurred therefore by the City. All rights, powers, and remedies of the City hereunder shall be cumulative and not alternative and shall be in addition to Surety for any amount guaranteed hereunder whether action is brought against the Contractor or whether Contractor is joined in any such action or actions or not.

NOW THEREFORE, the condition of this obligation is such that if said Principal shall faithfully perform all the promises of the Principal, as set forth and provided in the Contract, in the Contract Documents, and in this Bond, then this obligation shall be null and void, otherwise it shall remain in full force and effect.

When a work, term, or phrase is issued in this Bond, it shall be interpreted or construed first as defined in this Bond, the Contract, or the Contract Documents; second, if not defined in the Bond, Contract, or Contract Documents, it shall be interpreted or construed as defined in applicable provisions of the Iowa Code; third, if not defined in the Iowa Code, it shall be interpreted or construed according to its generally accepted meaning in the construction industry; and fourth, if it has no generally accepted meaning in the construction industry, it shall be interpreted or construed according to its common or customary usage.

Failure to specify or particularize shall not exclude terms or provisions not mentioned and shall not limit liability hereunder. The Contract and Contract Documents are hereby made a part of this Bond.

SURETY:	**PRINCIPAL:**
_____	_____
Surety Company	Contractor
By: _____	By: _____
Signature Attorney-in-Fact/Officer	Signature
_____	_____
Name of Attorney-in-Fact/Officer	Name (Print/Type)
_____	_____
Company Name	Title
_____	_____
Company Address	Address
_____	_____
City, State, Zip Code	City, State, Zip Code
_____	_____
Company Telephone Number	Telephone Number

Note: All signatures on this bond must be original signatures in ink; copies of facsimile of any signature will not be accepted. This bond must be sealed with the Surety's seal. The Certificate or Power of Attorney accompanying this bond must be valid on its face and sealed with the Surety's seal.

INSERT INSURANCE CERTIFICATES

ACORD®

CERTIFICATE OF LIABILITY INSURANCE

DATE (MM/DD/YYYY)

THIS CERTIFICATE IS ISSUED AS A MATTER OF INFORMATION ONLY AND CONFERS NO RIGHTS UPON THE CERTIFICATE HOLDER. THIS CERTIFICATE DOES NOT AFFIRMATIVELY OR NEGATIVELY AMEND, EXTEND OR ALTER THE COVERAGE AFFORDED BY THE POLICIES BELOW. THIS CERTIFICATE OF INSURANCE DOES NOT CONSTITUTE A CONTRACT BETWEEN THE ISSUING INSURER(S), AUTHORIZED REPRESENTATIVE OR PRODUCER, AND THE CERTIFICATE HOLDER.

IMPORTANT: If the certificate holder is an ADDITIONAL INSURED, the policy(ies) must be endorsed. If SUBROGATION IS WAIVED, subject to the terms and conditions of the policy, certain policies may require an endorsement. A statement on this certificate does not confer rights to the certificate holder in lieu of such endorsement(s).

PRODUCER

CONTACT NAME:
PHONE (A/C, No, Ext): FAX (A/C, No):
E-MAIL ADDRESS:

INSURER(S) AFFORDING COVERAGE	NAIC #
INSURER A :	
INSURER B :	
INSURER C :	
INSURER D :	
INSURER E :	
INSURER F :	

INSURED

COVERAGES CERTIFICATE NUMBER: REVISION NUMBER:

THIS IS TO CERTIFY THAT THE POLICIES OF INSURANCE LISTED BELOW HAVE BEEN ISSUED TO THE INSURED NAMED ABOVE FOR THE POLICY PERIOD INDICATED. NOTWITHSTANDING ANY REQUIREMENT, TERM OR CONDITION OF ANY CONTRACT OR OTHER DOCUMENT WITH RESPECT TO WHICH THIS CERTIFICATE MAY BE ISSUED OR MAY PERTAIN, THE INSURANCE AFFORDED BY THE POLICIES DESCRIBED HEREIN IS SUBJECT TO ALL THE TERMS, EXCLUSIONS AND CONDITIONS OF SUCH POLICIES. LIMITS SHOWN MAY HAVE BEEN REDUCED BY PAID CLAIMS.

INSR LTR	TYPE OF INSURANCE	ADDL INSR	SUBR WVD	POLICY NUMBER	POLICY EFF (MM/DD/YYYY)	POLICY EXP (MM/DD/YYYY)	LIMITS	
	GENERAL LIABILITY						EACH OCCURRENCE	$ 1,000,000
	X COMMERCIAL GENERAL LIABILITY	X					DAMAGE TO RENTED PREMISES (Ea occurrence)	$
	CLAIMS-MADE X OCCUR						MED EXP (Any one person)	$ 5,000
							PERSONAL & ADV INJURY	$ 1,000,000
							GENERAL AGGREGATE	$ 2,000,000
	GEN'L AGGREGATE LIMIT APPLIES PER:						PRODUCTS - COMP/OP AGG	$ 2,000,000
	POLICY PRO-JECT LOC							$
	AUTOMOBILE LIABILITY						COMBINED SINGLE LIMIT (Ea accident)	$ 2,000,000
	X ANY AUTO						BODILY INJURY (Per person)	$
	ALL OWNED AUTOS / SCHEDULED AUTOS						BODILY INJURY (Per accident)	$
	HIRED AUTOS / NON-OWNED AUTOS						PROPERTY DAMAGE (Per accident)	$
								$
	UMBRELLA LIAB / OCCUR						EACH OCCURRENCE	$
	EXCESS LIAB / CLAIMS-MADE						AGGREGATE	$
	DED / RETENTION $							$
	WORKERS COMPENSATION AND EMPLOYERS' LIABILITY						X WC STATU-TORY LIMITS / OTH-ER	
	ANY PROPRIETOR/PARTNER/EXECUTIVE OFFICER/MEMBER EXCLUDED? (Mandatory in NH) If yes, describe under DESCRIPTION OF OPERATIONS below	Y / N N / A					E.L. EACH ACCIDENT	$ 500,000
							E.L. DISEASE - EA EMPLOYEE	$ 500,000
							E.L. DISEASE - POLICY LIMIT	$ 500,000

DESCRIPTION OF OPERATIONS / LOCATIONS / VEHICLES (Attach ACORD 101, Additional Remarks Schedule, if more space is required)

Project Name & City Project #
Sioux City, IA

The City of Sioux City is listed as a named additional insured for general & automobile liability.

CERTIFICATE HOLDER

City of Sioux City
PO Box 447
Sioux City, IA 51102

CANCELLATION

SHOULD ANY OF THE ABOVE DESCRIBED POLICIES BE CANCELLED BEFORE THE EXPIRATION DATE THEREOF, NOTICE WILL BE DELIVERED IN ACCORDANCE WITH THE POLICY PROVISIONS.

AUTHORIZED REPRESENTATIVE

© 1988-2010 ACORD CORPORATION. All rights reserved.

ACORD 25 (2010/05) The ACORD name and logo are registered marks of ACORD

Clear All

SAMPLE

Revised 5/1/15 AH

GENERAL CONDITIONS

TABLE OF CONTENTS

Section 1 – Definitions GC-2
Section 2 – Contract Documents GC-3
Section 3 – The City GC-4
Section 4 – The Representative GC-7
Section 5 – The Contractor GC-9
Section 6 – Miscellaneous Provisions GC-14
Section 7 – Time GC-17
Section 8 – Payments and Completion GC-18
Section 9 – Protection of Persons and Property GC-22
Section 10 – Insurance and Indemnification GC-23
Section 11 – Changes in the Work GC-25
Section 12 – Correction of Work GC-27
Section 13 – Termination of the Contract GC-27
Section 14 – Claims GC-29

GENERAL CONDITIONS

SECTION 1 - DEFINITIONS

The following terms as used in the contract documents shall have the following meanings:

1.1 **Change Order** - A change order is a written order to the Contractor signed by the City and/or the Representative, ordering a change which has been found necessary or desirable to the work from that originally shown by the plans and specifications. A change order can also represent a final quantity adjustment. A Change order duly executed by the Contractor constitutes authorized modifications of the contract.

1.2 **City** - The City of Sioux City, Iowa.

1.3 **City Council** - The duly elected members of the City Council of the City of Sioux City, Iowa.

1.4 **The Contract** - The documents that make up the contract are set forth in the instrument identified as the Form of Contract of which these general conditions are a part.

1.5 **Contract Completion Date** - The contract completion date is the date on which the Contractor must complete the Work.

1.6 **Contract Price/Contract Sum** - The contract price is the total of the unit prices stated in the Form of Contract. The contract sum is the total amount payable by the City to the Contractor for the performance of the work under the contract documents after applying actual measurements of work product to unit prices and adding or deducting all approved change orders.

1.7 **Contract Time** - The total number of calendar days allotted for the completion of the work.

1.8 **Contractor** - The person, firm or corporation to whom the contract is awarded by the City.

1.9 **Days** - The term days as used in the contract shall mean calendar days.

1.10 **Extra Work** - Extra work shall mean work not provided for in the contract, as awarded, but deemed essential to the satisfactory completion of the contract within its intended scope and authorized by the Representative or is desired by the City in addition to that work called for in the drawings and specifications. Extra work shall not include additional materials, equipment, and labor used due to natural variations in surface or subsurface conditions.

1.11 **Notice** - Where in any of the contract documents there is any provision in respect to the giving of any notice, such notice shall be deemed to have been given (as to the City), when written notice shall be delivered to the Representative, or on the third delivery day after the notice shall have been placed in the United States mail addressed to the said Representative at his office; as to the Contractor, when a written

notice shall be delivered to the chief representative of the Contractor at the site of the project to be constructed under the contract or on the third delivery day after mailing such written notice in the United States mail addressed to the Contractor at the place stated in the papers prepared by him to accompany his proposal as the address of his permanent place of business; as to the surety on the performance bond, on the third day after the written notice shall have been placed in the United States mail addressed to the surety at the home office of such surety.

1.12 **Punch List** - A list of Work Product that remains to be completed to the satisfaction of the Representative in order to satisfy the terms of the contract.

1.13 **Representative** - The Representative means the duly appointed person (either staff, or outside consultant) designated by the City, who shall be the City's representative during the period of time work is performed under this contract. The Representative shall have only those powers and duties contained in the contract. Whenever the term Representative is used, it shall be construed to include his duly authorized representative.

1.14 **Shop Drawings** - Shop drawings include drawings, diagrams, layouts, schematics, descriptive literature, illustrations, schedules, performance and test data, and similar materials furnished by the Contractor to explain in detail specific portions of the work required by the contract.

1.15 **Site** - The location designated by the Representative where the final work product is to be delivered for acceptance by the City.

1.16 **Subcontractor** - A person, firm or corporation other than the Contractor, supplying labor and materials or labor for work at the site of the project.

1.17 **Work** - The furnishing of all labor, material, equipment, and other incidentals necessary or convenient to the successful completion imposed by the contract, including delivery of the work product to the site.

1.18 **Work Product** - Parts of and/or the ultimate item to be constructed and ultimately delivered to the City, including installation where required.

SECTION 2 - CONTRACT DOCUMENTS

2.1 **The Contract** - The contract represents the entire and integrated agreement between the parties hereto and supersedes all prior negotiations, representations, or agreements, either written or oral. Except as provided by General Conditions, Sections 11.1 and 11.3, the contract may be amended or modified only by a written change order signed by the Representative, and/or the City, and the Contractor. Nothing contained in the contract documents shall create any contractual relationship between the City and any subcontractor or sub-subcontractor.

2.2 **Correlation and Intent** – (a) The intent of the contract documents is to include all items necessary for the proper execution and completion of the work. The contract documents are complementary, and what is required by any one shall be as binding as if required by all. Work not covered in the contract documents will not be required

unless it is consistent therewith and is reasonably inferable therefrom as being necessary to produce the intended results. Words and abbreviations which have well known technical or trade meanings are used in the contract documents in accordance with such recognized meanings.

(b) It is the intent of the Contract Documents to describe a functionally complete Project to be constructed in accordance with the Contract Documents. Any work, material or equipment that may reasonably be inferred from the Contract Documents, or from prevailing custom or trade usage as being required to produce the intended result, will be furnished and performed whether or not specifically called for. This shall include, but not be limited to, items specifically identified in the specifications as incidental. Work items clearly depicted on the plans, which are not covered by a specific bid item, are considered to be incidental to the Contract.

2.3 **Successors and Assignment** - The City and the Contractor each binds himself, his partners, successors, assigns and legal representatives to the other party hereto and to the partners, successors, assigns and legal representatives of such other party in respect to all covenants, agreements and obligations contained in the contract documents. No assignment by the Contractor of any principal construction contract or any part thereof or of the funds to be received thereunder by the Contractor, will be recognized unless such assignment has had the written approval of the City and the surety has been given due notice of such assignment and has furnished written consent thereto. In addition to the usual recitals in assignment contracts, the following language must be set forth:

> *"It is agreed that the funds to be paid to the assignee under this assignment are subject to the prior lien for services rendered or materials supplied for the performance of the work called for in said contract in favor of all persons, firms or corporations rendering such services or supplying such materials."*

2.4 **Governing Law** - This contract shall be governed by any applicable federal laws and by the laws of the State of Iowa and the ordinances of the City.

2.5 **Jurisdiction -** The Woodbury County, Iowa, District Court shall have exclusive jurisdiction of all litigation between the Contractor and the City.

2.6 **Rights and Remedies** - The duties and obligations imposed by the contract and the rights and remedies available thereunder shall be in addition to and not a limitation of any duties, obligations, rights and remedies otherwise imposed or available by law.

SECTION 3 - THE CITY

3.1 **Information** - Information or services under the City's control shall be furnished by the City upon request of the Contractor with reasonable promptness to avoid delay in the orderly progress of the work. The City shall not be responsible for the accuracy of information given to the Contractor unless specifically warranted by the Representative to be accurate.

3.2 **Copies Provided** - Unless otherwise provided in the contract documents, the Contractor will be furnished, free of charge, all copies of drawings and specifications, reasonably necessary for the execution of the work.

3.3 **Coordination of Contract Documents -** (a) In case of any discrepancy between the various Contract Documents, the priority of such documents, and therefore the order in which the provisions of such documents shall govern, shall be as found in Article IV of the Form of Contract.

(b) The Contractor shall not take advantage of any apparent error or omission in the plans and/or specifications or of any discrepancy between the plans and/or specifications. The Representative shall be permitted to make such correction in interpretation as may be deemed necessary for the fulfillment of the intent of the plans and specifications.

3.4 **Construction Stakes** – The City, or Representative, will furnish the Contractor with all lines, grades and measurements necessary to the proper prosecution and control of the work contracted. The Contractor shall satisfy himself as to the accuracy of all measurements before constructing any permanent structure and shall not take advantage of any errors which may have been made in laying out the work. Such stakes and markings as the City may set for either the Representative's or the Contractor's guidance will be scrupulously preserved by the Contractor. In case of negligence on the part of the Contractor, or his employees, resulting in the destruction of such stakes or markings, an amount equal to the cost of replacing the same may be deducted from subsequent estimates due the Contractor, at the discretion of the Representative. The City will not be responsible for delays due to lack of grade or line stakes unless the Contractor shall have given the Representative two (2) business days' notice, in writing, that such stakes will be needed. The Contractor shall preserve all survey control points during construction.

3.5 **Instructions** - The City shall forward all instructions to the Contractor through the Representative.

3.6 **City's Right to Stop the Work** - If the Contractor fails to correct defective work as required by General Conditions, Section 12.2, or persistently fails to carry out the work in accordance with the contract documents, the Representative or the City by a written notice, may order the Contractor to stop the work, or any portion thereof, until the cause for such order has been eliminated; however, this right of the City to stop the work shall not give rise to any duty on the part of the City to exercise this right for the benefit of the Contractor or entity.

3.7 **City's Right to Carry Out the Work** - If the Contractor defaults or neglects to carry out the work in accordance with the contract documents, and fails within seven days after receipt of written notice from the City, to commence and continue correction of such default or neglect with diligence and promptness, the City may, without prejudice to any other remedy it may have, make good such deficiencies. In such case, an appropriate change order shall be issued, deducting from the payments then or thereafter due the Contractor the cost of correcting such deficiencies, including compensation for any additional services made necessary by such default, neglect or failure. Failure by the Contractor to execute such a change order shall not invalidate

the order, and the Representative shall note such refusal thereon. If the payments then or thereafter due the Contractor are not sufficient to cover such amount, the Contractor shall pay the difference to the City.

3.8 **Suspension of Work -** (a) The City or the Representative may at any time suspend the work or any part thereof by giving a reasonable notice (oral or written) to the Contractor. If orally, the City or the Representative must follow up within a reasonable time in writing. In an emergency situation, the length of the notice may be reduced accordingly.

(b) In the event the Contractor is ordered to suspend work for some unforeseen cause not provided for in the contract documents, and over which the Contractor has no control, the Contractor may be reimbursed for actual money expended on the job during the period of shutdown. The Contractor must use every reasonable effort to utilize employees and machinery on other parts of the job. No allowance will be made for anticipated profits. The period of shutdown shall be computed from the date of the order for work to cease until the date of the order for work to resume. Claims for such compensation shall be processed under General Conditions, Section 14 herein. No provision of this paragraph shall be construed as entitling the Contractor to compensation for delays caused by orders suspending the work due to inclement weather, failure of surety, Contractor's failure to perform in accordance with the contract or order of the Representative, for suspension made at the request of the Contractor or for any other delay provided for in the contract.

(c) If it should become necessary to stop work for any period, the Contractor shall store all materials in such manner that they will not become an obstruction, nor become damaged in any way, and shall take every precaution to prevent damage or deterioration of the work performed; provided suitable drainage by opening ditches, shoulder drains, etc., and erect temporary structures where necessary.

(d) The Contractor shall not suspend the work without written authority from the Representative, and shall proceed with the work promptly when notified by the Representative to resume operations.

(e) This paragraph does not require the Representative to suspend the work for any reasons.

3.9 **Use and Possession Prior to Completion -** (a) The City shall have the right to take possession of and use any completed or partially completed part of the work delivered to the City. Such possession or use shall not be deemed an acceptance of any work under the contract. While the City has such possession or use, the Contractor, notwithstanding the provisions of the clause of this contract regarding protection of the work, shall be relieved of the responsibility for the loss or damage to the work resulting from the City's possession or use. However, the Contractor will be responsible for any damages which may be caused by defective work or failure to comply with the contract documents. If such prior possession or use by the City delays the progress of the work or causes additional expense to the Contractor, an equitable adjustment in the contract sum or the time of completion will be made and the contract shall be modified in writing accordingly and the provisions of General Conditions, Section 7 shall not be applicable.

(b) Possession and use by the City shall not be construed to constitute an extension of the Contractor's time to complete the work.

SECTION 4 - THE REPRESENTATIVE

4.1 **City's Representative -** The Representative will provide administration of the contract on behalf of the City as herein provided. The Representative will be the City's representative until final payment is due. The City's instructions to the Contractor shall be forwarded through the Representative. The Representative will have authority to act on behalf of the City only to the extent provided in the contract documents, unless otherwise modified by written instrument in accordance with General Conditions, Section 2.1.

4.2 **Representative Not to Control Construction -** The Representative will not be responsible for and will not have control or charge of construction means, methods, techniques, sequences or procedures, or for safety precautions and programs in connection with the work (except as specifically set out in the contract documents), and will not be responsible for the Contractor's failure to carry out the work in accordance with the contract documents. The Representative will not be responsible for or have control or charge over the acts or omissions of the Contractor, subcontractors, or any of their agents or employees, or any other persons performing any of the work.

4.3 **Payments Certified -** Based on the Representative's observations and an evaluation of the Contractor's progress in the work, the Representative will determine the amounts owing to the Contractor and will issue certificates for payments in such amounts, as provided herein, to the Contractor for review and approval. If approved by the Contractor, it is to be signed and returned to the Representative for processing.

4.4 **Interpreter of Contract Documents -** (a) The Representative will be the interpreter of the requirements of the contract documents and the judge of the performance thereunder for the City. The Representative will render interpretations necessary for the proper execution or progress of the work, with reasonable promptness and in accordance with any time limit agreed upon.

(b) Claims, disputes and other matters in question between the Contractor and Representative relating to the execution or progress of the work or the interpretation of the contract documents, shall be determined by the Representative, which he will render in writing within twenty days unless a longer time is agreed. The Representative's decision with regard to execution or progress of the work or interpretation of the contract documents will be final.

4.5 **Authority to Reject Work -** The Representative will have authority to reject work which does not conform to the contract documents. Whenever, in his opinion, he considers it necessary or advisable for the implementation of the intent of the contract documents, he will have authority to require special inspection or testing of the work whether or not such work be then fabricated, installed or completed.

4.6 **Shop Drawings Approved –** When shop drawings are required by other contract documents, the Representative will review and approve or take other appropriate action upon Contractor's submittals, such as shop drawings and samples, but only for conformance with the design concept of the work and with the information given in the contract documents. Such action shall be taken with reasonable promptness so as to cause no delay. The Representative's approval of a specific item shall not indicate approval of an assembly of which the item is a component.

4.7 **Change Orders -** The Representative will prepare change orders in accordance with General Conditions, Section 11 and will have authority to order minor changes in the work as provided in General Conditions, Section 11.3.

4.8 **Approval of Sources of Supply of Material -** If other contract documents require that all or certain materials to be incorporated into the project be approved by the City, the following provisions and General Conditions, Section 4.9 and 4.10 apply. The source of supply of each of the materials required may be approved by the Representative before delivery is started. Preliminary samples may be submitted by the Contractor, producer, or owner of the supply, for inspection or tests. The results obtained from testing such samples may be used for preliminary approval, but will not be used as a final acceptance of the materials. All materials proposed to be used may be tested at any time during their preparation and use. If, after trial, it is found that sources of supply which have been approved do not furnish a product of uniform quality, or if the product from any source proves unacceptable at any time, the Contractor shall furnish approved material from another source.

4.9 **Approval and Acceptance of Materials** - (a) Samples of all materials for testing upon which is to be based the acceptance or rejection, shall be taken by the Representative or his authorized representative at the discretion of the Representative. Materials may be sampled either prior to shipment or after being received at the place of construction. All sampling, inspection and testing shall be done in accordance with the methods hereinafter prescribed.

(b) The Contractor shall provide such facilities as the Representative or his representative may require, for conducting field tests, and for collecting and forwarding samples. The Contractor shall not use or incorporate into the work any materials represented by the samples until tests have been made, and the material found to be acceptable. Only materials conforming to the requirements of these specifications shall be used in the work. Any materials which, after approval, have for any reason become unfit for use shall not be incorporated into the work.

4.10 **Method of Sampling and Testing** - (a) Except as otherwise provided, sampling and testing of all materials, and the laboratory method and testing equipment required under these specifications, shall be in accordance with the current AASHTO Standard Specifications. Sampling and testing of materials not covered by AASHTO and not otherwise provided for, shall be in accordance with the standards of the Standard and Tentative Methods of the A.S.T.M. as published in the most recent edition thereof.

(b) Materials must meet the standards established by AASHTO or ASTM.

(c) The testing of samples and materials shall be made at the expense of the City. Laboratory sieves shall have square openings of the size specified. The Contractor shall furnish the required samples without charge. The Contractor shall give sufficient notification of the placing of orders for materials to permit testing.

4.11 **Final Certificate of Payment -** The Representative will conduct inspections to determine final completion, will receive for the City written warranties and related documents required by the contract and assembled by the Contractor, and will issue a certificate of final payment, for review and approval, upon compliance with the requirements of General Conditions, Section 8.

4.12 **Authority Limited -** The duties, responsibilities and limitations of authority of the Representative as the City's representative during construction as set forth in the contract documents will not be modified or extended without written consent of the City. In case of the termination of the employment of the Representative, the City shall appoint a substitute Representative who shall have the same powers and responsibilities as the Representative defined in the contract.

4.13 **Inspection and Authority and Duties of Inspectors -** (a) Inspection of the construction work shall be under the control of the City.

(b) Inspectors are representatives of the Representative and shall be authorized to inspect all work done and all materials furnished. Such inspection may extend to all and any part of the work, and to the preparation, fabrication or manufacture of the materials to be used. The inspector is not authorized to revoke, alter or waive any requirements of the specifications. The inspector is authorized to call the attention of the Contractor to any failure of the work or materials to conform to the specifications and contract. The inspector shall have the authority to reject materials or suspend the work until any questions at issue can be referred to and decided by the Representative.

(c) The inspector shall in no case act as foreman or perform other duties for the Contractor, nor interfere with the management of the work by the latter. Any advice which the inspector may give the Contractor shall in no way be construed as binding to the Representative in any way, or releasing the Contractor from fulfilling all the terms of the contract.

SECTION 5 - THE CONTRACTOR

5.1 **Review of Contract Documents -** The Contractor shall carefully study and compare the contract documents and shall at once report to the Representative any error, inconsistency or omission he may discover. The Contractor shall not be liable to the City for any damage resulting from any such errors, inconsistencies or omissions in the contract documents, unless he proceeds with the work or any part thereof with knowledge of an error, inconsistency or omission. The Contractor shall perform no portion of the work at any time without contract documents or, where required, approved shop drawings, product data or samples for such portion of the work.

5.2 **Supervision and Construction Procedures -** (a) The Contractor shall supervise and direct the work, using his best skill and attention. He shall be solely responsible for all portions of the work under the contract.

(b) The Contractor shall be responsible to the City for the acts and omissions of his employees, subcontractors and their agents and employees, and other persons performing any of the work under a contract with the Contractor.

(c) The Contractor shall not be relieved from his obligations to perform the work in accordance with the contract documents, either by the activities or duties of the Representative in his administration of the contract, or by inspections, tests or approvals performed by persons other than the Contractor.

(d) The Contractor shall provide and maintain in a neat and sanitary condition, properly secluded, such accommodations for the use of his employees as may be necessary to comply with the requirements and regulations of the state, or local department of health or other agencies having jurisdiction therewith.

(e) The Contractor shall employ competent and conscientious persons with sufficient skill to properly perform the work assigned to them. The Representative may demand the dismissal of any employee who is disobedient, careless or lacks the necessary skill to perform the work assigned.

(f) The Contractor shall store materials at the site of the work, and conduct the work so as to cause no greater obstruction to traffic than is considered necessary by the Representative.

(g) The Contractor shall maintain one set of the contract documents at the site, at all times.

5.3 **Notification to Property Owners -** Where the work will potentially affect adjacent or nearby property owners/tenants, the City will provide an informational paper (door hanger) that the Contractor is to give to each property owner/tenant. The Contractor shall distribute this paper at least three (3) business days, but not more than ten (10) business days, prior to beginning work, to those property owners/tenants that will or may be affected by the work.

Additionally, the Contractor shall notify property owners/tenants as to when they will be working adjacent to their property so that any private property, lawn irrigation, landscaping, planters, fencing, etc., within the construction area can be removed by the property owner/tenant prior to construction.

5.4 **Prosecution of Work -** (a) Immediately after award of the contract, the Contractor shall make necessary arrangements for a pre-construction meeting with the Representative so as to clarify scheduling, and other work components of this project.

(b) The Contractor shall notify the Representative at least twenty-four hours in advance of the time he intends to start. The Representative shall have control of the order in which the various parts of the improvements are to be performed. The order of the improvement as determined by the Contractor will be followed except where the

Representative determines that such order would not be in the best interest of the City. The Contractor shall conduct the work in such a manner and with sufficient material, equipment, and labor, as is considered necessary to insure its completion within the time limit set forth in the Form of Contract. The work covered by and included in this contract shall be prosecuted regularly, and uninterruptedly from the time specified for commencement, until all work is completed in every detail, to the satisfaction of the Representative. Should the prosecution of the work for any reason be discontinued by the Contractor, with the consent of the Representative, he shall notify the Representative at least twenty-four hours in advance of resuming operations.

(c) If it appears that the rate of progress is such that the contract will not be completed within the contract period, or if the work is not being executed in a satisfactory and workmanlike manner, the City may order the Contractor to take such steps as considered necessary to complete the contract within the period of time specified, or to prosecute the work in a satisfactory manner. If the Contractor fails to comply with such order within two weeks from receipt of same, he shall automatically be disqualified from receiving additional awards, and the Representative shall have the right to declare the contract in default and to complete the work in accordance with the provisions of General Conditions, Section 13.

(d) The Contractor must complete the project, including all Punch List items, prior to the completion date, or liquidated damages will be charged in accordance with General Conditions, Section 7.2.

(e) Upon completion of the work, the Contractor shall request, in writing, that the final inspection be made. This request will be made within a time frame that will allow the Contractor time to complete the Punch List items prior to the completion date.

(f) The Contractor's sequence of operations shall be such as to cause as little inconvenience to the general public as possible.

5.5 **Superintendent -** A qualified superintendent, who is acceptable to the City, shall be assigned by the Contractor to the work, and give efficient supervision to the work until its completion. The superintendent shall have full authority to act on behalf of the Contractor, and all directions given to the superintendent shall be considered given to the Contractor. In general, the superintendent shall not be engaged in the full-time operation of equipment/machinery on the work.

5.6 **Labor and Materials -** Unless otherwise provided in the contract documents, the Contractor shall provide and pay for all labor, materials, equipment, tools, construction equipment and machinery, water, heat, utilities, transportation, and other facilities and services necessary for the proper execution and completion of the work, whether temporary or permanent, and whether or not incorporated or to be incorporated in the work.

5.7 **Specifications Applicable -** All work shall be constructed in accordance with the current version of the Iowa Statewide Urban Design and Specifications (SUDAS), and the current City supplement.

5.8 **Warranty -** The Contractor warrants to the City and the Representative that all materials and equipment furnished under this contract will be new unless otherwise specified, and that all work will be of good quality, free from faults and defects, and in conformance with the contract documents. All work not conforming to these requirements, including substitutions not properly approved and authorized, may be considered defective. If required by the City, the Contractor shall furnish satisfactory evidence as to the kind and quality of materials and equipment. This warranty is not limited by the provisions of General Conditions, Section 12.2. Warranty periods begin when the City accepts the work, and extends for a period of time as defined in the Performance Bond.

5.9 **Removal of Rejected Materials -** The Contractor shall promptly remove all rejected work.

5.10 **Tax Statement -** Upon completion of this contract and acceptance thereof by the City Council, if the Contractor was not issued a Tax Exempt certificate, the Contractor shall furnish the City, in duplicate on Iowa Department of Revenue Form 35-002, a certified list of all sales taxes and/or use taxes paid by him in connection with the execution of this contract. The Contractor shall also require each of his subcontractors to keep similar records, and to furnish him a sufficient number of such certificates so that he may furnish duplicates thereof to the City. All of the above-mentioned certified statements must be filed with the Representative within thirty days after the City accepts the completed project. Final payment may be withheld from the Contractor for failure to file with the City a properly executed form as required herein.

5.11 **Permits, Fees and Notices -** (a) If not previously obtained by the City, the Contractor shall obtain all permits, pay all fees, give all notices, and comply with all permits, laws, ordinances, rules, regulations, and lawful orders of any public authority, bearing on the performance of the work.

(b) It is not the responsibility of the Contractor to make certain that the contract documents are in accordance with applicable laws, statutes, building codes and regulations. If the Contractor observes that any of the contract documents are at variance therewith in any respect, he shall promptly notify the Representative in writing, and any necessary changes shall be accomplished by appropriate change order. If the Contractor performs any work knowing it to be contrary to such laws, ordinances, rules and regulations, and without such notice to the Representative, he shall assume full responsibility therefor, and shall bear all costs attributable thereto.

5.12 **Work Progress -** The progress of the work shall be at a rate sufficient to complete the contract within the time allowed. If it appears that the rate of progress is such that the contract will not be completed within the time allowed, or if the work is not being executed in a satisfactory and workmanlike manner, the Representative may order the Contractor to take such steps as he considers necessary to complete the contract within the period of time specified, or to prosecute the work in a satisfactory manner. If the Contractor fails to comply with such order within two weeks after receipt of the order, he may be disqualified from receiving any additional bidding proposals, and the City shall have the right to declare the contract in default in accordance with General Conditions, Section 13.1. Failure of the City or the Representative to issue such order shall not alter the Contractor's responsibility under the contract. The Contractor's

sequence of operations shall be such as to cause as little inconvenience to the general public as possible.

5.13 **Shop Drawings -** (a) If shop drawings are required by other contract documents, the following provisions shall apply. The Contractor shall review, approve and submit, with reasonable promptness and in such sequence as to cause no delay in the work or in the work of the City, or any separate Contractor, all shop drawings and samples required by the contract. By approving and submitting shop drawings and samples, the Contractor represents that he has determined and verified all materials, measurements, and construction criteria related thereto, or will do so, and that he has checked and coordinated the information contained within such submittals with the requirements of the work and of the contract.

(b) The Contractor shall not be relieved of responsibility for any deviation from the requirements of the contract by the Representative's approval of shop drawings or samples unless the Contractor has specifically informed the Representative in writing of such deviation at the time of submission and the Representative has given written approval to the specific deviation. The Contractor shall not be relieved from responsibility for errors or omissions in the shop drawings or samples by the Representative's approval thereof.

(c) The Contractor shall direct specific attention, in writing or on resubmitted shop drawings or samples, to revisions other than those requested by the Representative on previous submittals.

(d) All shop drawings and samples prepared by the Contractor and paid for by the City shall be the property of the City and upon completion of the work hereunder shall be delivered to the City.

5.14 **Communications -** The Contractor shall forward all communications to the City through the Representative. Prior to commencement of the work, the Contractor shall provide the Representative with a telephone number where the Contractor or his superintendent can be reached in an emergency at any time after commencement of the work, until the date of final completion.

5.15 **Royalties and Patents -** The Contractor shall pay all royalties and license fees. He shall defend all suits or claims for infringement of any patent rights and shall save the City harmless from loss on account thereof, except that the City shall be responsible for all such loss when a particular design, process, or the product of a particular manufacturer or manufacturers is specified, but if the Contractor has reason to believe that the design, process, or product specified is an infringement of a patent, he shall be responsible for such loss unless he promptly gives such information to the Representative.

5.16 **Subletting or Assigning of Contract -** Should the Contractor elect to assign this contract, the assignment shall be approved by the Contractor's bonding company, and shall then be presented for consideration by the City. Assignment can only be consummated after approval by the City. The City's decision on whether to consent to an assignment shall be conclusive and no appeal by the Contractor shall be permitted.

5.17 **Cleaning Up -** The Contractor at all times shall keep the premises free from accumulation of waste materials or rubbish caused by his operations. At the completion of the work he shall remove all his waste materials and rubbish from and about the project as well as all his tools, construction equipment, machinery and surplus materials, and return the premises to the original condition as it existed immediately prior to construction. If the Contractor fails to clean up at the completion of the work, the City may do so, and the cost thereof shall be charged to the Contractor.

SECTION 6 - MISCELLANEOUS PROVISIONS

6.1 **Affirmative Action -** The Contractor shall conform to the City of Sioux City's Affirmative Action Program Requirements and shall sign the Affirmative Action Information form as included in the bid documents.

6.2 **Arbitration -** Any controversy or claim arising out of or relating to this contract, or the breach thereof which cannot be resolved by mutual agreement, may be settled by arbitration only if the times, places, arbitrators, and various rules of arbitration conduct can be mutually agreed upon in writing, and approved by the Contractor and City in writing, any other paragraph, law or rule to the contrary notwithstanding.

6.3 **Inspection and Testing -** (a) All work (which term includes but is not restricted to materials, workmanship, and manufacture and fabrication of components) shall be subject to inspection and test by the Representative or his representative at all reasonable times and at all places prior to acceptance. Any such inspection and test is for the sole benefit of providing quality control measures to assure that the work strictly complies with the contract requirements. No inspection or test by the Representative shall be construed as constituting or implying acceptance. The inspection or test shall not relieve the Contractor of responsibility for damage to or loss of the material prior to acceptance, nor in any way affect the continuing rights of the City after acceptance of the completed work. The City, or its Representative, will provide construction observation, management and inspection services for this project. It shall be the responsibility of the contractor to notify the City, or it's Representative, in writing, at least twenty-four (24) hours in advance for use of the City's inspectors. If the work is interrupted for any reason other than weather, the Contractor shall provide twenty-four (24) hour written notice before resuming work.

(b) The Contractor shall, without charge, replace any material or correct any workmanship found by the Representative not to conform to the contract requirements, unless in the public interest, the City consents to accept such material or workmanship with an appropriate adjustment in contract sum. The Contractor shall promptly segregate and remove rejected material from the premises.

(c) If the Contractor does not promptly replace rejected material or correct rejected workmanship, the City; (1) may, by contract or otherwise, replace such material, or correct such workmanship, and charge the cost thereof to the Contractor, or (2) may terminate the Contractor's right to proceed in accordance with General Conditions, Section 13 of this contract.

6.4 **Preference for Iowa Products and Labor -** The Contractor shall give preference to products and provisions grown and coal produced within the state of Iowa, and to Iowa domestic labor in the construction of the work, over foreign products and labor, and shall otherwise comply with the provisions of Chapter 73 of the Code of Iowa.

6.5 **Subcontractors** - (a) The City will not recognize any subcontractor on the project as having any Contractor responsibility.

(b) The Contractor shall, with its bid documents, notify the Representative in writing of the names of any subcontractors proposed for the work.

(c) The City reserves the right to object to the use of any proposed subcontractor who:

(1) Is currently in violation of any law, ordinance, or regulation governing affirmative action programs;

(2) Has defaulted on any prior project with the City, and such default has not been cured to the City's satisfaction;

(3) Does not possess the necessary licenses or skills to perform the work.

6.6. **Other Contracts -** The City may undertake or award other contracts for additional work, and the Contractor shall fully cooperate with such other Contractors, and city employees, and carefully fit his work to such additional work as may be directed by the Representative. The Contractor shall not commit or permit any act which will interfere with the performance of work by any other Contractor or city employee.

6.7 **Demurrage and Respotting -** The City will be responsible for demurrage charges only when such charges accrue because of actions by the City which delay the unloading of the work product. Where the Contractor's actions also delay the unloading of any material, the City will not be responsible for any demurrage charges.

The City will pay railroad charges due to the respotting of cars only when such respotting is ordered by the City.

6.8 **Rights and Remedies -** (a) The duties and obligations imposed by the contract documents, and the rights and remedies available thereunder shall be in addition to and not a limitation of any duties, obligations, rights and remedies otherwise imposed or available by law. In the event of a conflict, the provisions of this contract will control.

(b) No action or failure to act by the City, Representative or Contractor shall constitute a waiver of any right or duty afford any of them under the contract, nor shall any such action or failure to act constitute an approval or acquiescence in any breach thereunder, except as may be specifically agreed in writing.

6.9 **Explosives -** Unless otherwise provided for in the Contractor documents, the use of explosives is prohibited without the express written consent of the Representative.

6.10 **Traffic Control –** Where the work will require traffic control on public right of way, the following provisions shall apply.

(a) All traffic control is the responsibility of the Contractor and must be done in accordance with the current version of the Manual of Uniform Traffic Control Devices (MUTCD). Prior to commencement of construction, the Contractor shall submit the traffic control plans to the Representative for review and approval.

(b) The Contractor shall, at his own expense and without further order, provide, erect and maintain, at all times during the construction of the work or any suspension of the work, and until completion and final acceptance thereof, suitable and requisite barricades and other types of traffic control devices as may be necessary to insure the safety of the public, as well as those engaged in the work. All barricades and other channelizing devices shall conform to Part 6 of the current version of the MUTCD.

(c) No street, sidewalk, or alley shall be closed to traffic for any reason, except for those identified elsewhere in the contract documents or as approved by the Representative to facilitate construction. The Representative shall be the judge of how many streets, sidewalks, or alleys, or parts of streets, sidewalks, or alleys it is necessary to be closed at any one time, and may refuse to close additional streets, sidewalks, or alleys, until such time as the current work is finished and open to traffic.

(d) If a street, sidewalk, or alley, is to be closed as provided herein, the Contractor shall notify the Representative ten (10) calendar days prior to the closure. The City reserves the right to refuse road, sidewalk, or alley closures based on a determination by the Representative of the Contractor's ability to meet the closure schedule. The sequence of street, sidewalk, or alley closing will be discussed at the pre-construction meeting, or during the progress of work.

(e) The Contractor must provide a 24 hour telephone number to the City and the 9-1-1 Communications Center in the event that defective, missing or non-operational signing is observed.

(f) All questions on traffic signing should be directed to the Representative.

(g) The Representative shall coordinate the removal of the existing regulatory signs which interfere with the proposed construction. Contractor shall provide a minimum of two days' notice. Contractor shall maintain all stop signs during construction.

(h) The Contractor's bid shall include all costs of furnishing, erecting, maintaining, moving and removing traffic control devices, including temporary No Parking signs, for divisions of work covered by this project.

(i) The Contractor shall post all temporary No Parking signs and file all of the appropriate documentation at the posting. The City will provide the temporary No Parking signs and forms for documentation to the Contractor. The effective time and date of the posting cannot be less than 24 hours from posting.

(j) If adequate barricades are not around the work site, as determined by the Representative, the person in charge at the job site will be notified. Continual failure to

comply with proper barricading procedures is sufficient reason for the City to shut down the project until the Contractor shall have provided the necessary protection.

6.11 **Archaeological and Historical Findings**

(a) Unless otherwise specified in this subsection, the Contractor is advised that the site of the work is not within any property, district, or site, and does not contain any building, structure, or object listed in the current National Register of Historic Places published by the United States Department of Interior.

(b) Should the Contractor encounter, during his operations, any human skeletal remains, building, part of a building, structure, or object which is incongruous with its surroundings, he shall immediately cease operations in that location and notify the Representative. The Representative will immediately investigate the Contractor's finding and will direct the Contractor to either resume his operations or to suspend operations as directed. The Contractor should also note Chapter 716.5 and 305A of the Iowa Code pertaining to the preservation of these findings.

(c) Should the Representative order suspension of the Contractor's operations in order to protect an archaeological or historical finding, or order the Contractor to perform extra work, such shall be covered by an appropriate change order as provided in General Conditions, Section 11. If appropriate, the change order shall include an extension of contract time in accordance with General Conditions, Section 7.

SECTION 7 - TIME

7.1 **Time is of the Essence -** All time limits stated in the contract documents are of the essence of the contract. The completion date for this project is stated in the Form of Contract, and Notice to Proceed.

7.2 **Liquidated Damages -** (a) Should the Contractor fail to complete the work on or before the specified date of completion, as noted above, it is understood that the City will sustain pecuniary damages. The Contractor shall pay to the City as liquidated damages and not as a penalty, the sum of money set forth in the Form of Contract for each day that elapses after the contract completion date, and the date on which the work covered by such contract is actually completed, including the Punch List, general cleanup, and the removal of all equipment and obstructions from the site of the work. Such liquidated damages shall be payable to reimburse or compensate, at least in part, the City for: (1) the administration of the work covered by such contract and any other contract or contracts beyond the contract completion date; (2) the additional Representative expenses directly attributable to the work and incurred because of the delay; (3) expenditures resulting from the inability of the City and the general public to use the work product from and after such contract completion date until the actual date of completion; (4) other miscellaneous obligations and expenditures incurred by the City directly as a result of the failure to complete the work covered by such contract on or before the contract completion date. It is agreed that these damages are difficult of precise measurement at the inception of the contract and the sum stated herein in the Form of Contract is the best possible estimate of the damages that will accrue because of delay.

(b) The total amount so payable by the Contractor as liquidated damages may be deducted from any moneys due and payable to the Contractor by the City through the issuance of a change order, or so much thereof as is not deducted, shall be chargeable to and will be payable promptly by such Contractor or his bonding company to the City.

7.3 **Delays and Extensions of Time -** (a) The Contractor shall perform fully, entirely and in a satisfactory manner all the work by the contract completion date stated in the Form of Contract. The work covered by and included in this Contract shall be prosecuted regularly and uninterruptedly from the time specified for commencement until all work is completed in every detail to the satisfaction of the Representative. No extension of time, whether for bad weather or for any other cause whatsoever, shall be granted unless authorized by the Representative by a written change order. The Contractor is not excused for any delay whatsoever except upon the written consent authorized by the Representative. If extra work or materials are required, the original completion date shall still govern unless the Representative grants an extension by written change order.

(b) In no event will additional time be granted to the Contractor unless the delay and subsequent failure to perform is beyond the control of the Contractor. If the failure to perform is caused by the failure of a subcontractor to perform or to make progress, and if such failure arises out of causes beyond the control of both the Contractor and any subcontractor, and without fault or negligence of either of them, the Contractor shall not be deemed to be in fault unless: (1) the supplies or services to be furnished by the subcontractor were obtainable from other sources; (2) the Representative shall have ordered the Contractor in writing to procure such supplies or services from other sources; or (3) the Contractor shall have failed to comply reasonably with such order.

(c) If the Contractor is delayed at any time in the progress of the work by:

(1) Any order, act, or neglect of the City, the Representative or their representative or agent; or

(2) Any other cause beyond the Contractor's control;

then the Representative is authorized to grant an additional amount of time to the Contractor to complete the contract.

7.4 **Claims for Additional Time -** Any claim for additional contract time shall be made in writing to the Representative not more than seven (7) days after occurrence of the event giving rise to the claim; otherwise it shall be waived. In the case of a continuing delay, only one claim is necessary. The Contractor shall provide an estimate of the probable effect of such claim on the progress of the work. The Representative shall promptly investigate the Contractor's claim for additional contract time, and if justified, he shall notify the Contractor in writing, and an equitable adjustment shall be made and the contract modified pursuant to General Conditions, Section 11.

7.5 **Delay for Interpretations -** If no agreement is made stating the dates upon which interpretations, as provided in General Conditions, Section 4.4, shall be furnished, then no claim for additional contract time shall be allowed on account of failure to furnish

such interpretations until twenty days after written request is made for them, and not then unless such claim is reasonable.

7.6 **Extra Work -** If extra work or materials are required by written change order, no extension of time will be granted unless an extension of time is provided within the written change order.

7.7 **Sundays and Legal Holidays -** Except for such work as may be required to properly maintain or protect completed, or partially completed construction, or to maintain lights and barricades, no work will be permitted on Sundays or legal holidays without specific permission of the Representative.

7.8 **No Damages for Delay -** General Conditions, Section 7.4 precludes the recovery of damages under any other provision of the contract documents for delay for any reasons falling within General Conditions, Section 7.3(c)(2). General Conditions, Sections 7.5 and 7.6 preclude the recovery for damages for delay under the circumstances enumerated therein. In addition, no damages for delays can be recovered for reasons found in General Conditions, Section 7.3(c)(1) to the extent the delay would have occurred in any event due to any other cause, including the negligence of the Contractor; or, for which an adjustment is provided or excluded under any other provision of this contract. There shall be no allocation of fault during concurrent delays.

7.9 **Procedure for Appeal of the Representative's Decision -** The procedure for appeal of the Representative's decision on a claim for additional time shall be governed by General Conditions, Section 14.4.

7.10 **Change Order Required -** Any approved claim for additional contract time under the provisions of this section shall be granted by change order.

7.11 **Extensions of Time -** Except for an extension of the contract completion date, the Representative may, upon written request and for good cause shown by the Contractor, grant an extension of time to perform any act required by the contract. The request for an extension of time must be made within the time to initially perform the act. An extension of time must be in writing and signed by the Representative.

SECTION 8 - PAYMENTS AND COMPLETION

8.1 **Payment for Work Performed -** The Contractor will receive and accept as full payment for all items of acceptable work performed which are covered by definite unit prices or lump sum amounts specified in the Form of Contract, the rate specified therein, or in the case of work under a change order, the amount stated in the change order.

8.2 **Application for Payments -** Applications for payments shall be made by the Representative, to the City, on no more than a monthly basis.

8.3 **Measurement of Quantities -** The work completed under the contract shall be measured according to United States standard measures. Payment will be based on

the actual quantity of work performed under the various classifications of work in the contract.

8.4 **Scope of Payment -** The Contractor shall accept the compensation herein provided as full payment for furnishing all materials, labor, tools, and equipment, and for performing all work under the contract or any extension thereof allowed under General Conditions, Section 11; also, for all cost arising from the action of the elements or other natural causes, agreements, and performances, non-performance, or delays involving other Contractors and third parties, or injunctions or lawsuits resulting therefrom, or from any unforeseen difficulties not otherwise provided for in the specifications and which may be encountered during prosecution of the work, and up to the time of acceptance thereof, except damage to the work due to acts of war. Nothing herein shall in and of itself be construed to prejudice or deny any claim filed under provisions of General Conditions, Section 14.

8.5 **Title -** The Contractor warrants that title to the work product covered by an application for payment will pass to the City upon delivery or upon installation, where required, or upon the receipt of a progress payment by the Contractor. This paragraph shall not negate or abridge the Contractor's obligations with regard to protection of the work in General Conditions, Section 9 or to any warranties required by the contract.

8.6 **Payments -** (a) If the work extends over a period of more than one month, the Contractor will receive monthly progress payments from the City based on the Representative's estimate of the amount of work product completed and delivered in an acceptable manner. The City's monthly progress payments shall be partial payments on the contract sum, and the monthly progress payment by the City does not constitute final acceptance of the work upon which the estimates are based.

(b) Work completed in an acceptable manner during the month shall be paid for by the City within thirty days from the date the progress payment request was approved by the City.

(c) The City shall retain from each monthly progress payment five (5) percent of that amount which is determined to be due by the Representative.

8.7 **Representative's Representations -** Submission of an application of payment signed by the Representative will constitute a representation by the Representative to the City, based on his observations at the site, that the work has progressed to the point indicated; that, to the best of his knowledge, information and belief, the quality of the work is in accordance with the contract documents (subject to an evaluation of the work for conformance with the contract documents upon substantial or final completion, to the results of any subsequent tests required by or performed under the contract documents, to minor deviations from the contract documents correctable prior to completion, and to any specific qualifications stated in an attachment to the estimate); and that the Contractor is entitled to payment in the amount certified.

8.8 **Payments to Subcontractors -** The City shall not have any obligation to pay or to see to the payment of any moneys to any subcontractor or suppliers.

8.9 **Payment not Acceptance of Defective Work -** No estimate made for a progress payment, nor any progress payment, nor any partial or entire use of the work by the City, shall constitute acceptance of any work not in accordance with the contract documents.

8.10 **Payments Withheld -** (a) The Representative may decline to submit an application for payment and may withhold his estimate in whole or in part, to the extent necessarily reasonable to protect the City, if in his opinion, he is unable to make representations to the City as provided in General Conditions, Section 8.7. If the Representative is unable to make representations to the City as provided in General Conditions, Section 8.7, and thus submit the application, he will notify the Contractor. The Representative may also decline to submit an application for payment or, because of subsequently discovered evidence or subsequent observations, he may nullify the whole or any part of any estimate authorizing payment previously issued and adjust future estimates, to such extent as may be necessary, in his opinion, to protect the City from loss because of:

(1) Defective work not remedied;

(2) Damage to property of the City or another Contractor;

(3) Reasonable evidence that the work will not be completed within the contract time, but only to the extent of liquidated damages and reasonably anticipated additional Representative expenses;

(4) Persistent failure to carry out the work in accordance with the contract documents;

(5) Errors in previous estimates;

(6) Expenses or fees due the City for work on the project.

When the above grounds are removed, payment shall be made for amounts withheld because of them.

8.11 **Final Completion, Acceptance, and Final Payment -** (a) Final completion means satisfactory completion of all work required by the contract documents or completion of the work product, including the Punch List, to such an extent the City is willing to accept the work product and authorize final payment.

Acceptance of a less than fully completed work product is solely within the discretion of the Representative. Upon final completion of the work, the Representative will promptly make an inspection, and when he/she finds the work acceptable under the contract, and the work FULLY completed, he/she shall promptly issue a certificate, over his/her own signature, stating that the work required by this contract has been completed and is accepted by him/her under the terms and conditions thereof, and the entire balance found to be due the Contractor, including the retained percentage, is due and payable as follows: Five (5) percent of the contract sum shall be retained for thirty (30) days following formal acceptance of the work by the City Council under the

provisions of Chapter 573, Code of Iowa. All other unpaid sums shall be paid in accordance with General Conditions, Section 8.6.

(b) Before issuance of the retained percentage, the Contractor shall provide the certifications and other documentation that are required by the Contract Documents. These documents are due in the Representative's office forty-five days after the date of the first Punch List issued by the Representative. In the absence of a Punch List, the documents are due forty-five days after the date of the certificate of completion referred to in paragraph (a) above. The Representative may extend the time limits imposed herein for good cause shown. If the Contractor fails to comply with this paragraph, the City may, in its discretion, waive receipt of all certifications and other documents, accept the project and assess to the Contractor the damages the City has incurred as a result of the Contractor's failure to comply with this paragraph. The amounts of damages may be withheld from any sum of money due the Contractor by the City.

(c) The making of the final payment shall constitute a waiver of all claims by the City, other than those arising from (1) unsettled claims; (2) faulty work appearing within the guarantee period provided in the special conditions, or Performance, Payment, and Maintenance bond; (3) the requirements of the drawings and specifications; or (4) manufacturer's guarantees.

8.12 **Substantial Completion -** The concept of "substantial completion" has no application to this contract.

SECTION 9 - PROTECTION OF PERSONS AND PROPERTY

9.1 **Contractor's Obligation -** (a) The Contractor shall take all reasonable precautions for the safety of, and shall provide all reasonable protection to prevent damage, injury or loss to:

(1) All employees on the work and all other persons who may be affected thereby while at or near the site;

(2) All the work and all materials and equipment to be incorporated therein, whether in storage on or off the site, under the care, custody or control of the Contractor or any of the subcontractors; and

(3) Other property at the site or adjacent thereto, including the following property which is illustrative but not inclusive: trees, shrubs, lawns, lawn sprinkling systems, walks, pavements, roadways, structures and utilities not designated for removal, relocation or replacement in the course of construction.

9.2 **Compliance with Applicable Laws -** The Contractor shall give all notices and comply with all applicable laws, ordinances, rules, regulations, and lawful orders of any public authority bearing on the safety of persons or property or their protection from damage, injury, or loss.

9.3 **Remedy for Damage or Loss -** The Contractor shall promptly remedy all damage or loss caused in whole or in part by the Contractor, any subcontractor, or anyone directly or indirectly employed by any of them, or by anyone for whose acts any of them may be liable and for which the Contractor is responsible under General Conditions, Section 9.1, except damage or loss attributable to the acts or omissions of the City or Representative or anyone directly or indirectly employed by either of them, or by anyone for whose acts either of them may be liable, and not attributable to the fault or negligence of the Contractor. The foregoing obligations of the Contractor are in addition to his obligations under General Conditions, Section 10.6.

SECTION 10 - INSURANCE AND INDEMNIFICATION

10.1 **Contractor's Insurance -** (a) The Contractor shall secure and maintain such insurance policies as will protect himself and his sub-Contractors from claims for bodily injuries, death, or property damage which may arise from operations under this Contract, whether such operations be by himself or by a subcontractor or anyone employed by them directly or indirectly, unless authorized by the City in writing. Policies must be issued by companies rated "A" or better by "Best's Policyholders Ratings Guide." The following insurance policies are required:

(1) Workers Compensation – A standard Workers Compensation policy approved for use in the State of Iowa shall be issued with the following coverages:

(a) Statutory Benefits covering all employees injured on the job by accident or disease as prescribed by Iowa Code Chapter 85.

(b) Employer's Liability Insurance with the following limits:
Bodily injury by accident …….$500,000 each accident
Bodily injury by disease …….$500,000 each accident
Bodily injury by disease …….$500,000 policy limit

(2) Comprehensive General Liability
(a) Combined Single Limit.....$1,000,000
(b) Aggregate.....$2,000,000
(c) Personal and Advertising Injury Limit $1,000,000
(d) Products Completed Operations Aggregate Limit.....$2,000,000
(e) Fire Damage Limit (any one fire).....$50,000
(f) Medical Damage Limit (any one person).....$5,000

(3) Automobile Public Liability and
Property Damage -Combined Single Limit $2,000,000

10.2 **Insurance Inclusion -** The comprehensive general liability insurance shall include products and completed operations broad form property damage coverage. The completed operations and products liability shall be maintained for two years after final payment.

10.3 **Contractual Liability -** The insurance required by General Conditions, Section 10.1 shall include contractual liability insurance coverage for the Contractor's obligations under General Conditions, Section 10.6.

10.4 **Certificates of Insurance -** Certificates of insurance acceptable to the City indicating insurance required by the contract is in force shall be filed with the City prior to approval of the contract by the City. These certificates shall contain a provision that coverages afforded under the policies will not be canceled until at least thirty days prior written notice has been given to the City, through the Representative. Except for the Workers Compensation, the City shall be named an additional insured on the Certificate of Insurance and shall be primary to and not in excess of or contributory with any other insurance available to the City.

10.5 **Property Insurance -** Unless otherwise provided, it shall be the responsibility of the Contractor to purchase and maintain property insurance ("builder's risk") for the entire work, until acceptance by the City, at the site to the full insurable value thereof. This insurance shall include the interests of the City, the Contractor, and subcontractors in the work, and shall insure against the perils of fire, and extended coverage for physical loss or damage including, without duplication of coverage, theft, vandalism and malicious mischief. If the City is damaged by failure of the Contractor to purchase or maintain such insurance, then the Contractor shall bear all reasonable costs properly attributable thereto. Risk of loss to the work product passes to the City upon its delivery, installation where required at the site, and acceptance by the City.

10.6 **Indemnification -** (a) To the fullest extent permitted by law, the Contractor shall defend, indemnify, and hold harmless the City, its elected officials, officers, agents, and employees from and against all claims, damages, losses and expenses, including but not limited to all attorneys' fees, arising out of or resulting from the performance of the work provided that any such claim, damage, loss, or expense is: (1) attributable to bodily injury, sickness, disease or death, or to injury to or destruction of tangible property (other than the work itself), including the loss of use resulting therefrom and; and (2) is caused in whole or in part by any negligent act or omission of the Contractor, any subcontractor, anyone directly or indirectly employed by any of them, or anyone for whose acts any of them may be liable, regardless of whether or not it is caused in part by a party indemnified hereunder. Such obligation shall not be construed to negate, abridge, or otherwise reduce any other right or obligation of indemnity which would otherwise exist as to any party or person described in this paragraph.

(b) In any and all claims against the City, its elected officials, officers, agents, or employees, by any employee of the Contractor, any subcontractor, anyone directly or indirectly employed by any of them or anyone for whose acts any of them may be liable, the indemnification obligation under this paragraph shall not be limited in any way by any limitation on the amount or type of damages, compensation or benefits payable by or for the Contractor, or any subcontractor under workers' or workmen's compensation acts, disability benefit acts, or other employee benefit acts.

(c) The obligations of the Contractor under this paragraph shall not extend to the liability of the City, its elected officials, officers, agents or employees, or the Representative, arising out of: (1) the preparation or approval of drawings, opinions, reports, surveys, change orders, designs or specifications; or (2) the giving of or the failure to give directions or instructions by the Representative or his representatives provided such giving or failure to give is the primary cause of the injury or damage.

SECTION 11 - CHANGES IN THE WORK

11.1 **Change Orders -** (a) The Representative shall have authority to order any changes in the work. Such changes may be effected by written change order, and shall be binding on the City and the Contractor. If a change order is issued, it shall be prepared by the Representative, and submitted to the Contractor for his signature. The Contractor shall return written change orders to the Representative within fourteen days after receipt of the change order. The change order shall be signed by the Contractor, or if returned unsigned, contain a statement setting forth the Contractor's objections to the change order. In the event the Contractor fails to return the change order signed, or if it is returned unsigned without statement of objections to the change order within the fourteen day period, or in the event the Contractor commences the work covered by the change order before returning it to the Representative, it shall be conclusively presumed to be in full force and effect.

(b) Changes that affect the contract price, the contract sum, and the contract completion date shall be made by written change order. In conjunction with final payment per General Conditions, Section 8.11, a final change order will be issued for additions or deletions to the number of units caused by differences between the Representative's estimated quantities and actual quantities determined by measurements made in the field after the work is completed where the contract is unit priced.

11.2 **Changes and Increased or Decreased Quantities of Work -** (a) The Representative's authority to issue written change orders to make changes in the work, as may be considered necessary or desirable, to complete fully and acceptably the proposed construction in a satisfactory manner, may not change the total cost of the project, based on the originally estimated quantities and the unit prices bid, by more than twenty percent, and provided further that such alterations do not change the total cost of any major item, based on the originally estimated quantities and the unit price bid by more than twenty percent. (A major item shall be construed to be any item, the total cost of which is equal to greater than ten (10) percent of the total contract price, computed on the basis of the proposal quantity and the contract unit price).

(b) Should it become necessary, for the best interest of the City, to make changes in excess of that herein specified, the same shall be covered by supplemental agreement. The Contractor shall not start work on any alteration requiring a supplemental agreement until the Agreement setting forth the adjusted prices shall be executed by the City and the Contractor.

(c) In case a satisfactory adjustment in price cannot be reached for any item requiring a supplemental agreement, the City reserves the right to terminate the contract or negotiations as it applies to the items in question, and make such arrangements as may be deemed necessary to complete the work.

11.3 **Cost or Credit Determinations -** (a) The cost or credit to the City resulting from a change in the work ordered by the Representative other than changes requiring a supplemental agreement shall be determined by one of the following ways:

(1) By unit prices contained in the Contractor's original bid and incorporated in the contract documents;

(2) By the alternate bid schedule of prices contained in the Contractors' original bid and incorporated in the construction documents;

(3) By an acceptable unit price proposal from the Contractor;

(4) By an acceptable lump sum proposal from the Contractor;

(5) Force Account.

If items (1) and (2) above apply to the type of work being priced, items (3), (4) and (5) are not applicable and shall not be used. Force account shall be used if the City and Contractor are otherwise unable to agree upon a price under items (3) and (4) above.

11.4 **Force Account Basis -** Extra work performed on a forced account basis will be paid for in the following manner:

(a) For laborers, timekeepers, foremen, and superintendents, the Contractor shall receive the rate of wage shown on previous payrolls for the time they are actually engaged in the extra work, to which shall be added an amount equal to fifteen percent thereof, plus the amount of social security tax imposed by law upon the Contractor because of such force account work, plus the cost of workmen's compensation, public liability insurance, and employment security contributions. The fifteen percent shall cover compensation for the furnishing of the necessary small tools for the work together with all other overhead items of expense. The wage of the superintendent, timekeeper, or foreman who is the employed partly on force account work and partly on other work shall be prorated between the two classes of work according to the number of men shown by the payrolls as employed on each class of work.

(b) For materials used on force account work, the Contractor shall receive the actual cost of materials delivered on the work, including the freight and handling charges as shown by original receipted bills, to which cost shall be added a sum equal to fifteen percent thereof.

(c) For machinery tools, or equipment, and fuel and lubricants therefor, except small tools which may be used, the Representative shall allow the Contractor a reasonable rental rate to be agreed upon in writing before work is begun. No profit percentage shall be added to the rate.

Compensation as herein provided shall be accepted by the Contractor as payment in full for extra work done on a force account basis. It will be assumed that such payment includes the use of tools and equipment for which no rate is allowed, overhead and profit.

At the end of each day, the Contractor shall prepare payrolls in duplicate for labor furnished on a force account basis, using the contracting authority's standard force account forms. Both copies shall be signed by the inspector and Contractor's representative. One copy shall be furnished to the Representative and one to the

Contractor. Claims for extra work performed on a force account basis shall be submitted to the Representative in triplicate. To the claims shall be attached such receipts or statements as the Representative may require in support of such claims. Such claims shall be filed not later than the tenth day of the month following that in which the work was actually performed, and shall include all labor charges, rental charges on machinery, tools, and equipment, and all material charges insofar as they are available.

SECTION 12 - CORRECTION OF WORK

12.1 **Inspection -** All work is subject to inspection and approval at the site. The City reserves the right to reject and refuse acceptance of items which are not in accordance with the instructions, specifications, drawings, work product data or Contractor's warranty. The City will charge the Contractor the cost of inspecting work product that is rejected. Materials or work product that is returned to the Contractor shall be shipped at the Contractor's expense.

12.2 **Correction of Work -** The Contractor shall promptly correct all work rejected by the Representative or inspector as defective, or as failing to conform to the contract documents, whether observed before or after acceptance. The Contractor shall bear all costs of correcting such rejected work, including compensation for the Representative's additional services made necessary thereby.

12.3 **Warranty Work -** If, within the period of time as prescribed in the terms of the applicable special warranty required by the contract documents, and if the work is found to be defective or not in accordance with the contract documents, the Contractor shall correct it promptly after receipt of a written notice from the City to do so unless the City has previously given the Contractor a written acceptance of such condition. This obligation shall survive termination of the contract. The City shall give such notice promptly after discovery of the condition. If the work is covered by a bond, the City shall also notify the Contractor's bonding company.

12.4 **Failure to Correct -** If the Contractor fails to correct defective or non-conforming work as provided in General Conditions, Sections 5.9, 12.2 and 12.3, the City may correct it in accordance with General Conditions, Section 3.7. If the work is covered by a bond, the City shall have the right to require the work be done by the Contractor's bonding company.

12.5 **Accepting Defective Work -** If the City prefers to accept defective or non-conforming work, it may do so instead of requiring its removal and correction, in which case a change order will be issued to reflect a reduction in the contract sum where appropriate and equitable. Such adjustment shall be effected whether or not final payment has been made.

SECTION 13 - TERMINATION OF THE CONTRACT

13.1 **Termination by the City -** If the Contractor is adjudged a bankrupt, or if he makes a general assignment for the benefit of his creditors, or if a receiver is appointed on account of his insolvency, fails to prosecute the work so as to be able to finish on time, or persistently disregards laws, ordinances, rules, regulations, or orders of any public

authority having jurisdiction, or otherwise is guilty of a substantial violation of a provision of the contract documents, then the City, may, without prejudice to any right or remedy, and after giving the Contractor and his surety, if any, seven days' written notice, terminate the employment of the Contractor and may finish the work by whatever method it may deem expedient. In such case, the Contractor shall not be entitled to receive any further payment until the work is finished.

13.2 **Costs of Finishing Work -** If the unpaid balance of the contract sum exceeds the costs of finishing the work, such excess shall be paid to the Contractor. If such costs exceed the unpaid balance, the Contractor or his bonding company shall pay the difference to the City.

13.3 **Termination for the Convenience of the City -** (a) The performance of work under these contract documents may be terminated by the City in accordance with this paragraph in whole, or from time to time, in part, whenever the Representative and the City Council shall determine that such termination is in the best interest of the City. Any such termination shall be affected by delivery to the Contractor of a notice of termination specifying:

(1) What work is to terminate;

(2) When the termination is to become effective;

(3) The manner in which remaining work will be handled.

(b) In such event, and provided the items ordered are not standard commercial items, the City's maximum liability shall be limited to payment: (1) for completed and delivered items at contract price; and (2) of costs directly attributable to partially fabricated work product, if any, plus a profit thereon not to exceed eight (8) percent. The City shall have the right to delivery of work product partially fabricated and to all unused material and inventory acquired and included in the Contractor's claim, or to credit for the agreed value thereof. If the items ordered are standard commercial items, the City shall have the right to terminate the contract for convenience, in whole, or from time to time, in part, without any obligation or liability whatsoever, except for payment of item delivered prior to such termination.

In order to minimize liability in case changes are directed or termination for convenience occurs, as provided for in the clause immediately above with respect to non-standard commercial items, the Contractor agrees that the City will not be responsible for material or labor or production costs or charges that are unrealistic, excessive or inconsistent with the minimum needs to meet the delivery requirements of this order.

The Contractor is not authorized to procure materials, or release for production, any quantities ordered hereunder, until written authorization to proceed is received from the City, which authorization may cover the entire quantity ordered or any increment or series of increments thereof in the sole discretion of the City.

(c) The Contractor shall submit to the Representative any termination claim he may have within thirty days of the notice of termination. The Contractor shall be entitled to

payment for all work performed up to the date of termination, based upon the unit prices in the Form of Contract, plus the expenses incurred in terminating the contract, less payments made, and less any credits received from subcontractors and suppliers.

(d) In the event the Representative and the Contractor are unable to agree upon an amount, the Contractor may proceed under the provisions of General Conditions, Section 14.4.

SECTION 14 - CLAIMS

14.1 **Claims for Additional Cost -- Work -** (a) If the Contractor wishes to make a claim for an increase in the contract sum, he shall give the City, through the Representative, written notice thereof, within seven days after the occurrence of the event giving rise to such claim (or such shorter time as will provide the City with the opportunity to investigate the event and make a record of the circumstances surrounding same). This notice shall be given by the Contractor before proceeding to execute the work. No such claim shall be valid, and is waived by the Contractor unless so made. The fact that the City, its officials, agents, or employees, or the Representative, have actual knowledge of the event shall not relieve the Contractor of this requirement.

(b) The Representative shall promptly investigate the Contractor's claim, and upon completion of the investigation, notify the Contractor to proceed with the work. If the claim is justified, he shall notify the Contractor in writing and an equitable adjustment shall be made, and the contract modified in writing pursuant to General Conditions, Section 11.

(c) The Contractor shall afford the Representative notice and opportunity to keep strict account of actual costs incurred as defined for force account construction for the work giving rise to the claim. If the Contractor fails to do so, he thereby agrees to waive the claim for extra compensation for such work. The fact that the Representative has kept an accounting of the costs shall not be construed as establishing the validity of the claim.

14.2 **Claims for Additional Cost -- Orders -** If the Contractor claims that additional cost is involved because of: (1) any written interpretation pursuant to General Conditions, Section 4.4(a); (2) any order by the City to stop the work pursuant to General Conditions, Section 3.6 where the Contractor was not at fault; (3) any order for a change in the work issued pursuant to General Conditions, Section 11.1; (4) failure of any payment by the City due pursuant to General Conditions, Section 8; or (5) any other conduct on the part of the Representative or City, the Contractor shall make such claim as provided in General Conditions, Section 14.1(a).

14.3 **Differing Site Conditions -** No claim for differing site conditions will be allowed. It is the responsibility of the Contractor to ascertain all matters affecting the work.

14.4 **Procedure for Appealing the Representative's Decision -** (a) If the Representative determines that any claim of the Contractor does not justify payment or an increase in the contract sum, or contract time, or that the amount of increase requested by the Contractor should be reduced, the Representative shall so notify the Contractor in writing within twenty days. If the Representative fails to respond to any claim within

the time allotted, the claim shall automatically be deemed denied by the Representative.

(b) The decision of the Representative shall be final and binding upon the Contractor unless the Contractor appeals the decision of the Representative to the city council. Such appeal shall be taken within twenty days from the Representative's decision by filing with the city clerk a request for review of the Representative's decision and full statement of the facts surrounding the claim and the amount of the claim. The city council shall fix a date, time, and place to hear the matter, which date shall be not less than thirty days from receipt of the request for review. If the matter is not heard within thirty days or a decision is not rendered by the city council within fifteen (15) days of the hearing, the claim shall automatically be deemed denied by the city council.

(c) The decision of the city council shall be final and binding upon the Contractor unless within thirty days from the date of the decision of the city council or such additional time as the City may agree upon, the City and Contractor agree in writing to arbitration, or the Contractor files suit in the Woodbury County District Court.

14.5 **Procedure for Determining Costs -** If the City and the Contractor cannot agree on the amount of the adjustment in the contract sum, it shall be determined by the provision of General Conditions, Section 11.4.

14.6 **Submission of Claim -** (a) If the Representative or the city council determines that a claim should be denied or not allowed to the full extent requested, and if the Contractor desires further appeal of the matter, the Contractor shall submit to the Representative an itemized statement of each month's additional expenditures no later than thirty days after the last day of the month such expenditures are incurred. Failure to submit the statement required herein shall constitute a waiver of the expenses incurred during that month.

(b) No increase in the claim for additional costs of construction will be allowed if made more than thirty days after submission of the initial claim, and Contractor agrees to waive those costs.

(c) The amount of the claims submitted pursuant to the provisions of this paragraph shall establish the maximum allowable claim of the Contractor in any further proceedings to determine the validity and amount of the contested claim.

14.7 **Audit of Claims -** The City may, at reasonable times and places, audit the books and records of the Contractor who has submitted a claim pursuant to the provisions of General Conditions, Section 14 to the extent that such books and records relate to the cost and pricing data used in said claim. If the Contractor makes such a claim, he shall maintain his books and records until such time as the claim is finally resolved. If any records are lost or destroyed which would have substantiated the Contractor's claim, the claim shall be deemed waived by the Contractor.

14.8 **Contractor to Continue Work -** Nothing contained in this section shall be construed to permit the Contractor from continuing to prosecute the work so as to complete the project within the allotted time.

14.9 **Interest -** No claim for interest may be allowed which exceeds eight (8) percent per annum.

14.10 **Waiver of Claims -** (a) No claim by the Contractor, regardless of its nature, shall be allowed unless:

(1) Submitted with the request for final payment; or

(2) Made within thirty days after completion of the work;

whichever date occurs first, and the Contractor waives all claims unless so made.

SPECIAL PROVISIONS

2016 Rivers Landing Parking Facility Repairs Project

The specifications to be used on this project are the 2016 Iowa Statewide Urban Design and Specifications (SUDAS) in conjunction with the 2015 Sioux City Supplement to SUDAS. The following project special provisions take precedence over and revise the SUDAS and Sioux City Supplement to SUDAS.

1. **Pre-construction Conference**
   A pre-construction conference will be held at City Hall in the 4th Floor Clocktower Conference Room at a time to be determined by the City Project Manager. The contractor will receive the Notice to Proceed at the conclusion of the pre-construction meeting.

2. **Notification to Property Owners**
   The Owner will provide an informational paper that is to be given to the property owners on the streets this project affects. The Contractor shall provide liaison between his activities and all businesses/residences and distribute this paper seven (7) days prior to the time when works begins and/or when their street will be closed for construction, in order to allow the affected businesses and residences to compensate for disruptions caused by the project. Property owners will be notified seventy-two (72) hours prior to any scheduled utility outage including water outages.

3. **Section 1070 – Legal Relations and Responsibility to the Public**
   (the following is hereby added)

   2.06 Traffic Control
   C. The Contractor shall furnish, install, and maintain throughout the course of the construction all necessary construction signs, traffic control signs, barricades and other warning devices to inform the traveling public (including vehicular and pedestrians) of the construction within the project area. This shall include the removal or covering of existing traffic control signs, which are in conflict with the temporary construction signing. Existing traffic control signs which are removed shall be delivered to the City of Sioux City for storage during the duration of the construction. At the completion of the work, the Contractor shall remove all temporary signs and construction barricades and restore all permanent traffic control signs along the roadways (which were covered during the construction) as directed by the Engineer and the City of Sioux City.

   D. Prior to the start of construction, the Contractor shall submit all phase revisions to the Engineer and a traffic control plan to implement. The City of Sioux City reserves the right to modify the proposed construction signing and barricade plan as necessary throughout the course of the work to assure the safety of the traveling public. The Contractor shall coordinate and schedule all street closures with the City of Sioux City. Please contact the Engineering Division 712-279-6324 to issue a press release: start date, duration, extent & location of closure, detour route, reason for closure. Additional notices may be required, depending on the project staging.

   E. Payment for furnishing, installation, maintenance, and removal of all traffic control devices including temporary pavement marking, construction signs and barricades for each phase of the project shall be paid for lump sum at the contract unit price bid for "Traffic Control." This work shall also include submittal of all construction phase

revisions, removal of existing and all temporary pavement markings, and all necessary removal, reinstallation or covering of existing traffic control signs which may conflict with the proposed construction signing and traffic control plan.

F. The Contractor must provide a 24-hour phone number to the City and the 911 Operator in the event of defective, missing or non-operational signing.

G. All open trenches and other excavations shall be protected with suitable barriers, signs and lights to the extent that adequate protection is provided to the public against accident by reason of such open construction. Obstructions such as material piles and equipment shall be provided with similar warning signs and lights.

H. All traffic control devices, procedures and layouts shall be as per part VI of the current addition of the MUTCD as adopted by the Iowa Department of Transportation. All sign shall utilize retroreflective sheeting material which meets the requirements of Article 4186.03 of the English Standard Specifications of Highway and Bridge Construction 2012 series as published by the Iowa Department of Transportation or shall be illuminated by means of acceptable warning lights from sunset to sunrise. Material stored upon or alongside public streets, roads and highways shall be so placed that the work at all times shall be so conducted as to cause minimum obstruction and inconvenience to the traveling public.

I. Where Type III barricades are shown as part of a full closure, the installation shall include an adequate number of Type III barricades to reach from edge of pavement to edge of pavement, as well as orange safety fence placed from right-of- way line to right-of-way line or as necessary to prevent vehicles from going around the barricades and entering the work area.

J. The Traffic Control bid item shall include all costs associated with furnishing, placing, maintaining, and removing all traffic control devices including the cost of flaggers.

K. The basis of payment shall be 50 percent of Lump Sum price paid on the first Certificate for Payment and 100 percent of Lump Sum price paid when 95 percent of the value of the work is completed.

4. Section 1080 – Prosecution and Progress
(the following is hereby added)

1.17 Contact Personnel
Contractor shall provide the city and 911 operator with the name and phone number of their representative to be contacted during working and non-working hours as necessary.

6. City's Proposed Construction Schedule

The City anticipates the following timeline for this project. All dates are approximate.

- Council to Adopt Plans: March 14, 2016
- Bid Letting: April 5, 2016
- Council Award of Contract: April 19, 2016
- Council Approve (Execution of) Contract Documents: May 2, 2016
- Anticipated Pre-Construction Meeting: May 10, 2016
- Anticipated Date to Proceed: May 16, 2016
- Contract Completion Date: August 13, 2016

--END OF SPECIAL PROVISIONS--

SECTION 01000 – ADMINISTRATIVE REQUIREMENTS

1.1 CONTRACTUAL

A. Project consists of providing all materials, labor, equipment, supervision and services to perform repairs for Rivers Landing Parking Facility in Sioux City, Iowa.

B. Contractor shall perform the work in accordance with the executed contract with the Owner and these Contract Documents.

1.2 PROJECT MANAGEMENT AND COORDINATION

A. Coordinate construction to ensure efficient and orderly installation of each part of the Work.

B. Conduct progress meetings at Project site at Owners request. Contractor, Owner and Engineer to agree on meeting dates and times. Require attendance of each subcontractor, major supplier or other entity concerned with current progress or involved with planning or coordination of future activities. Contractor shall record minutes and distribute to parties involved, including Owner and Engineer, within 3 working days of the meeting.

1.3 SUBMITTAL PROCEDURES

A. Shop Drawings: Submit Project-specific information drawn to scale. Coordinate each submittal with fabrication, purchasing, testing, delivery, other submittals, and related activities that require sequential activity.

1. No extension of the Contract Time will be authorized because of failure to transmit submittals enough in advance of the Work to permit processing.
2. Engineer will not accept submittals from sources other than Contractor.
3. Engineer will not accept submittals without review and stamp by the Contractor
4. Identify deviations from the Contract Documents.
5. Submit 5 copies of each submittal.

1.4 QUALITY REQUIREMENTS

A. Testing and inspecting services are required to verify compliance with requirements specified or indicated. These services do not relieve Contractor of responsibility for compliance with Contract Document requirements. Engineer will identify Work Items to be tested and inform Contractor. Contractor is responsible for scheduling inspections and tests and notifying testing agency. Testing Agency to submit test results to Engineer. Concrete Testing shall consist of:

1. Sample freshly-mixed concrete, including prepackaged concrete, per ASTM C172 and conduct one (1) air content test per ASTM C231 or ASTM C173 for each 10 cu yards of concrete placed or each day's production, whichever is less.
2. Conduct one (1) slump test in accordance with ASTM C143 for each 10 yards of concrete placed, or each day’s production, whichever is less.

©2016, Walker Parking Consultants/Engineers, Inc. All rights reserved.

3. Mold and test compression test cylinders in accordance with ASTM C31 and test in accordance with ASTM C31 as follows:

   a. Take minimum of 6 cylinders for each 25 cu yards or fraction thereof, of each mix design of concrete placed in any 1 day. Use of 4 in. x 8 in. cylinders in lieu of standard cylinders is acceptable.
   b. Cover specimens properly, immediately after finishing. Protect outside surfaces of cardboard molds, if used, from contact with sources of water for first 24 hours after molding.
   c. Store test specimens on structure as near to point of sampling as possible and protect from elements in same manner as that given to portion of structure as specimen represents.
   d. Transport to test laboratory no more than 4 hours before testing. Remove molds from specimens immediately before testing.
   e. During first 24 hours after molding, store test specimens under conditions that maintain temperature immediately adjacent to specimens in range of 60 to 80° F. and prevent loss of moisture from specimens.
   f. Remove test specimens from molds at end of 20 ±4 hours and store at 73 ±3°F., 50 ±4% relative humidity in laboratory until moment of test.

B. Testing Agency: Owner shall arrange and pay for testing and inspection services. Testing Agency to be pre-approved by Owner and/or Engineer.

C. Regulations: Comply with industry standards and applicable laws and regulations of authorities having jurisdiction, including but not limited to, the following:

   1. Building Code requirements.
   2. Health and safety regulations (OSHA, ANSI)
   3. Utility company regulations.
   4. Police, Fire Department and Rescue Squad rules.

D. Inspections: Arrange for authorities having jurisdiction to inspect and test each temporary utility before use. Obtain required certifications and permits.

1.5 TEMPORARY FACILITIES AND CONTROLS

A. Use Charges: Contractor shall pay use charges for temporary utilities.

B. Provide field offices, storage trailers, and other support facilities as necessary for the Work.

C. Collect waste daily and, when containers are full, legally dispose of waste off-site.

D. Standards: Comply with ANSI A10.6, NECA's "Temporary Electrical Facilities," and NFPA 241.

E. Barricades, Warning Signs and Lights: Comply with industry standards, code requirements and applicable laws and regulations of the authorities having jurisdiction. Paint with appropriate colors, graphic signs to inform personnel and public of hazard being protected against. When appropriate and needed provide lighting, including warning lights.

©2016, Walker Parking Consultants/Engineers, Inc. All rights reserved.

F. Provide temporary environmental controls as required by authorities having jurisdiction including, but not limited to, erosion and sediment control, dust control, noise control, and pollution control.

G. Heating and Cooling: Provide temporary enclosures and heating and cooling required for curing materials or for protecting installed construction from adverse weather. Use equipment that will not have a harmful effect on workers, completed installations or elements being installed. Direct equipment exhaust away from building air intake locations.

H. Provide temporary fire protection. Comply with NFPA 241.

1.6 PRODUCT REQUIREMENTS

A. Provide products of same kind from a single source. The term "product" includes the terms "material," "equipment," "system," and similar terms.

B. Deliver, store, and handle products using means and methods that will prevent damage, deterioration, and loss, including theft. Comply with manufacturer's written instructions.

C. Provide products that comply with the Contract Documents, are undamaged, and are new at the time of installation.

1. Provide products complete with accessories, trim, finish, and other devices and components needed for a complete installation and the intended use and effect.

D. Select products to comply with all of the following that are applicable:

1. Where only a single product or manufacturer is named, provide the item indicated. No substitutions will be permitted.
2. Where two or more products or manufacturers are named, provide one of the items indicated. No substitutions will be permitted.
3. Where products are specified by name, accompanied by the term "available products" or "available manufacturers," provide one of the named items or comply with provisions for "comparable product" to obtain approval for use of an unnamed product or manufacturer.

1.7 SELECTIVE DEMOLITION REQUIREMENTS

A. Unless otherwise indicated, demolished materials become Contractor's property. Remove and dispose of legally from Project site. Do not burn demolished materials.

B. Items indicated to be removed and salvaged remain Owner's property. Remove, clean, and deliver to Owner's designated storage area.

C. Comply with EPA regulations and disposal regulations of authorities having jurisdiction.

D. Conduct demolition without disrupting Owner's use of the building.

E. It is not expected that hazardous materials will be encountered in the Work. If materials suspected of containing hazardous materials are encountered, do not disturb; immediately notify Owner. Hazardous materials will be removed by Owner.

©2016, Walker Parking Consultants/Engineers, Inc. All rights reserved.

F. Maintain and protect existing utilities to remain in service before proceeding with demolition, providing bypass connections to other parts of the building.

G. Locate, identify, shut off, disconnect, and cap off utility services to be demolished.

H. Conduct demolition operations and remove debris to prevent injury to people and damage to adjacent buildings and site improvements.

I. Provide and maintain shoring, bracing, or structural support to preserve building stability and prevent movement, settlement, or collapse.

J. Protect building structure and interior from weather and water leakage and damage.

K. Protect walls, ceilings, floors, and exposed finishes that are to remain. Erect and maintain full height dustproof partitions. Cover and protect fixtures, furnishings, and equipment that are to remain.

L. Neatly cut openings and holes plumb, square, and true to dimensions required. Use cutting methods least likely to damage construction to remain or adjoining construction.

M. Promptly patch and repair holes and damaged surfaces of building caused by demolition. Restore exposed finishes of patched areas and extend finish restoration into remaining adjoining construction.

END OF SECTION 01000

© Copyright 2016. All rights reserved. No part of this document may be reproduced in any form or by any means without permission from Walker Parking Consultants/Engineers Inc.

SECTION 01112 - SUMMARY OF WORK FOR RESTORATION

PART 1 - GENERAL

1.1 RELATED DOCUMENTS

A. Drawings and general provisions of Contract, including General and Supplementary Conditions and other Division 1 Specification Sections apply to this Section.

1.2 PROJECT DESCRIPTION

A. Work will be performed at locations within the parking structure as shown on Drawings. Work will begin on Level 6 between Grids B17 and C17 progressing down in association with work on Level 5 between Grids A1 and B1 progressing downward. ***Work for 2016 is limited to the work items and quantities on the Bid Form. Specifications and Drawings may contain Work Items that are not to be performed under this Contract. All work items in Section 02000, details, and work items noted on plan sheets not on bid form shall be ignored.***

B. Work required in these areas and estimated quantities are listed on Bid Form. Bid Quantities associated with Work Items listed on Drawings have been estimated and are subject to measurement as defined in Article "Measurement." Where additional Work Items are described, but not specifically located and/or shown on Drawings, Contractor shall be responsible for locating and marking areas to be repaired. Owner reserves right to increase or decrease quantities and add or delete work.

C. Work Item specifications and details shall govern all repair operations. Locations where Work Items apply are shown on Drawings as symbols.

D. Bidder shall make evaluation of work items described below prior to bidding. BIDDERS SHALL CAREFULLY EXAMINE CONTRACT DOCUMENTS AND SITE TO OBTAIN FIRST-HAND KNOWLEDGE OF EXISTING CONDITIONS. NO SUBSEQUENT EXTRAS WILL BE ALLOWED DUE TO ANY CLAIM OF LACK OF KNOWLEDGE FOR CONDITIONS THAT CAN BE DETERMINED BY EXAMINING SITE AND CONTRACT DOCUMENTS.

1.3 MEASUREMENTS

A. Before ordering any material or doing any Work, Contractor shall verify all measurements at Project site and shall be responsible for correctness of same.

B. Before proceeding with each Work Item, Contractor shall locate, mark, and measure quantity of each item and report quantities to Engineer. If measured quantities exceed Engineer's estimate, Contractor shall obtain written authorization to proceed from Owner before executing Work required for that Work Item.

©2016, Walker Parking Consultants/Engineers, Inc. All rights reserved.

C. Measurement of final in-place quantities for individual Work Items will be performed by Contractor and Engineer jointly.

D. Cost of Work included in each Work Item for quantities as indicated in Contract Documents shall be included in Base Bid.

1.4 WORK SEQUENCE

A. Prior to commencement of work, meet with Engineer and Owner representatives to establish sequence and schedule of Work. Contractor shall give Owner notice of areas to be cleared of cars at least 72 hours in advance of actual Work.

B. Contractor shall notify Owner's representative at least 24 hr prior to beginning any sandblasting operations, provided work notice under prior section has already been provided.

C. Contractor shall remove all broken concrete and debris from Work area on daily basis and dispose of same at authorized dump sites.

D. Contractor shall remove dust and air transported sand from remainder of facility at conclusion of operations in Work area.

1.5 CONTRACTOR USE OF PREMISES

A. General: Limit use of premises to construction activities in areas indicated; allow for Owner occupancy and use by public.

1. Confine operations to areas within Contract limits indicated.
2. Maximum number of spaces allowed to be out of service at any time for the facility shall be 200. Facility is available for repair work from 7am to 10pm, 7 days a week.
3. Secure Noise Permit as required.
4. Keep driveways and entrances serving premise clear and available to Owner and Owner's employees at all times. Do not use these areas for parking or storage of materials. Schedule deliveries to minimize space and time requirements for storage of materials and equipment on site.

B. Contractor's use of premises shall not interfere with operation of same.

C. Contractor's debris removal path shall be over non-repaired services unless physical restraints prevent use of such path.

D. Contractor shall confine its apparatus, materials, equipment, tool cribs, field offices and operations to areas designated by Owner and/or Engineer. Premise shall not be unreasonably encumbered with materials and equipment. Neat and orderly stockpiling and other operations shall be maintained and debris shall be regularly removed from site. Contractor shall not load or permit any part of structure to be loaded with weight that will endanger structural integrity or safety of facility. Contractor shall limit axle loads to maximum 4000 lb per axle and gross weight of 8000 lb, or stockpiling of

©2016, Walker Parking Consultants/Engineers, Inc. All rights reserved.

materials and equipment to 30 lb per sq ft. Contractor to observe existing height restrictions within parking structure.

E. Contractor Parking: Contractor's employees shall park within confines of work area.

F. On-Site Storage: Contractor shall not store materials or equipment at site of Work for more than one week prior to time materials or equipment is incorporated into Work.

G. Parking Facility shall remain in operation during entire construction period.

H. Contractor is responsible to repair mechanical, electrical damage caused due to his negligence. Electrical conduit and conductors may be embedded in all floor systems. Contractor determines location within repair areas.

I. Dust partitions are required on isolated supported floor surfaces to prevent intrusion of dust, debris, etc., or prevent dust, debris, etc., from escaping work area and contaminating remainder of facility, or adjacent structures. Contractor shall be responsible for damage caused due to lack of adequate protection. Mechanical venting of work area, if required by contractor, shall be established at locations acceptable to Owner.

1.6 BARRICADES

A. Contractor is responsible for:

1. Barricades,
2. Noise Control,
3. Dust Control,
4. Physical separation between work areas and other areas, and
5. Safety requirements for temporary floor holes, stairways and other unprotected edges.

1.7 TRAFFIC OFFICERS AND FLAGMEN

A. When, in Owner's opinion, it is necessary that uniformed police or security officers be used to protect and control pedestrian traffic, to direct vehicular traffic during construction and to keep traffic off any part of Work, or to protect public safety, Owner will provide a police/security detail.

©2016, Walker Parking Consultants/Engineers, Inc. All rights reserved.

1.8 CLAIMS

A. Contractor by shall promptly address all damages claims. Owner reserves right to resolve any claims not addressed. See General Provisions and Covenants.

END OF SECTION 01112

© Copyright 2016. All rights reserved. No part of this document may be reproduced in any form or by any means without permission from Walker Parking Consultants/Engineers, Inc.

SECTION 02000 - WORK ITEMS

PART 1 - GENERAL

RELATED DOCUMENTS

A. Drawings and general provisions of Contract, including General and Supplementary Conditions and Division 1 Specification Sections apply to this Section.

B. WORK SCOPE DEFINITION: Work Items are identified in this Section. Specification Section 01112 is a summary of work for restoration. Specification Section 02000 defines scope of work, references details, materials specification, and execution of work to be completed by a restoration contractor specializing in parking structure restoration.

C. DRAWINGS are provided in this Specification. Work Item designations on plans are associated with those contained within this specification section. Not all areas of work may be identified, but are to be located and quantified by Contractor and confirmed by Engineer. Receive written approval before proceeding with repairs.

D. WORK ITEM QUANTITIES are estimated and shall be located, marked and quantified by Contractor. Receive written approval of Engineer prior to beginning work and ordering materials. Refer to Specification Section 01112, “Measurements.” Work completed beyond approved quantities is at no cost to Owner.

E. WORK SITE PROTECTION: Vehicle and pedestrian protection around and inside project site are required since they are to remain in service throughout construction. Furnishing and install overhead protection, and fencing at all vehicle and pedestrian entrances and exits, and wall opening protection to contain debris in repair areas to eliminate damage to property and injury to pedestrians.

F. SITE SAFETY, protection and barricading are contractor’s responsibility. Contractor shall provide positive protection for all pedestrians and vehicles. See also Specification Section 01112 “Barricades / Protection.”

G. LANDCARE: In areas where Contractors’ work requires access in grass/landscape areas, provide two (2) 4’ x 8’ layers of ¾” plywood laid 90 degrees to one another for protection of grass/landscaped areas for Contractors’ heavy equipment. Other lightly used construction traffic areas shall have one (1) 4’ x 8’ layer of ¾” plywood placed in traffic areas. Light foot traffic area may not require protection so long as grass/landscape areas are not worn or rutted. Owner will not allow compaction of grass/landscape soils during any construction. Landcare protection is incidental to Contractors’ work.

H. CAUTION: Floor slabs / ceilings have post-tensioning tendons between Grids 1-3 and 15-17. These tendons are near surface at spalls and delaminations. Contractor shall use extreme caution when crack routing, saw cutting and removing concrete as not to damage existing tendons or tendon sheathing. Tendons will break with explosive force when cut. Contractor repair of damage shall be at no cost to Owner. Repair procedures shall be approved by Engineer prior to beginning Work.

©2016, Walker Parking Consultants/Engineers, Inc. All rights reserved.

I. MISCELLANEOUS ITEMS (example: mechanical, electrical, plumbing, threshold, fire extinguishers, protection posts and guards, signs, etc.) that are within/adjacent to repair area shall be removed / replaced / relocated as incidental to each Work Item. Contractor shall review all existing conditions to determine items affected by repair work. Make necessary temporary connections to maintain existing services / equipment to all areas of parking facility, and other areas affected by work. Contractor shall submit methods and schedule of temporary connections for Owner approval prior to commencement.

PART 2 - PRODUCTS (NOT APPLICABLE)

PART 3 - EXECUTION

WI 1.0 GENERAL REQUIREMENTS

A. Scope of Work

1. Work consists of performing all tasks, specifically required and incidental, which are not identified under separate Work Item designation, but necessary to perform the work identified in this project. This work includes, but is not limited to the following items:

   WI 1.1 - Mobilization
   WI 1.2 - Concrete Formwork
   WI 1.3 - Concrete Shores and Reshores
   WI 1.4 - Concrete Reinforcement
   WI 1.5 - Temporary Signage

WI 1.1 PROJECT MOBILIZATION

A. Scope of Work

1. Work consists of coordinating, scheduling, obtaining and assembling at construction site all equipment, materials, permits, supplies, manpower and other essentials and incidentals necessary to perform Work defined in this Contract. Payment of lump sum amount for mobilization shall be according to following schedule and shall be based on percentage of original contract amount earned.

B. Materials

1. None

C. Execution

1. At execution of agreement by all parties, payment of not more than 25% of mobilization lump sum amount.

©2016, Walker Parking Consultants/Engineers, Inc. All rights reserved.

2. When amount earned is greater than 10% but less than 25% of original contract amount, an additional amount will be paid to bring total payment for mobilization to 50% of mobilization lump sum amount.
3. When amount earned is equal to or greater than 25% but less than 50% of original contract amount, an additional amount will be paid to bring total payment for mobilization to 75% of mobilization lump sum amount.
4. When amount earned is equal to or greater than 50% of original contract amount, an additional amount will be paid to bring total payment for mobilization to 100% of mobilization lump sum amount.

WI 1.2 CONCRETE FORMWORK (INCIDENTAL)

A. Scope of Work

1. Work consists of furnishing all labor, materials, equipment, supervision, and incidentals necessary to install shoring and formwork as required for cast-in-place concrete.

B. Materials

1. Forms for Exposed Finish Concrete: Plywood, metal, metal-framed plywood faced, or other acceptable panel-type materials, to provide continuous, straight, smooth, exposed surfaces. Furnish in largest practicable sizes to minimize number of joints and to conform to joint system shown on Drawings.

    a. Use overlaid plywood complying with U.S. Product Standard PS-1 "A-C or B-B High Density Overlaid Concrete Form," Class I
    b. Use plywood complying with U.S. Product Standard PS-1 "B-B (Concrete Form) Plywood," Class I, Exterior Grade or better, mill-oiled and edge-sealed, with each piece bearing legible inspection trademark.

2. Forms for Unexposed Finish Concrete: Plywood, lumber, metal, or other acceptable material. Provide lumber dressed on at least 2 edges and one side for tight fit.
3. Form Coatings: Provide commercial formulation form-coating compounds with a maximum VOC of 350 mg/l that will not bond with, stain, or adversely affect concrete surfaces and will not impair subsequent treatments of concrete surfaces, including but not limited to water-curing, curing compound, stains, or paints.
4. Form Ties: Factory-fabricated, adjustable-length, removable or snap-off metal form ties, designed to prevent form deflection and to prevent spalling concrete upon removal. Provide units that will leave no metal closer than 1.5 in. to exposed surface.

    a. Provide ties that, when removed, will leave holes not larger than 1.0 in. diameter in concrete surface.

©2016, Walker Parking Consultants/Engineers, Inc. All rights reserved.

5. Shores:

    a. Nail Ellis clamps, if used with wood shores, to shores with minimum of two nails to prevent slipping.
    b. Wedges: Hardwood or steel. Softwood wedges prohibited.

C. Execution

1. Work shall conform to requirements of ACI 301 “Standard Specifications for Structural Concrete,” ACI 302.1 R “Guide for Concrete Floor Slab Construction,” ACI 318 “Building Code Requirements for Reinforced Concrete,” and ACI 347 “Recommended Practice for Concrete Formwork” except as modified by the following paragraphs.
2. Store all formwork and formwork materials clear of ground, protected, so as to preclude damage.
3. Construct forms to sizes, shapes, lines, and dimensions shown and to obtain accurate alignment, location, grades, level, and plumb work in finished structures. Provide for openings, offsets, sinkages, keyways, recesses, moldings, rustications, reglets, chamfers, blocking, screeds, bulkheads, anchorages and inserts, and other features required in work. Use selected materials to obtain required finishes. Solidly butt joints and provide backup at joints to prevent leakage of cement paste.
4. Fabricate forms for easy removal without hammering or prying against concrete surfaces. Provide crush plates or wrecking plates where stripping may damage cast concrete surfaces. Provide top forms for inclined surfaces where slope is too steep to place concrete with bottom forms only. Kerf wood inserts for forming keyways, reglets, recesses, and the like, for easy removal.
5. Provide temporary openings where interior area of formwork is inaccessible for cleanout, for inspection before concrete placement, and for placement of concrete. Securely brace temporary openings and set tightly to forms to prevent loss of concrete mortar. Locate temporary openings in forms at inconspicuous locations.
6. Chamfer exposed corners and edges as indicated, using wood, metal, PVC, or rubber chamfer strips fabricated to produce uniform smooth lines and tight edge joints.
7. Provisions for Other Trades: Provide openings in concrete formwork to accommodate work of other trades. Determine size and location of openings, recesses, and chases from trades providing such items. Accurately place and securely support items built into forms.
8. Cleaning and Tightening: Thoroughly clean forms and adjacent surfaces to receive concrete. Remove chips, wood, sawdust, dirt, or other debris just before concrete is placed. Retighten forms and bracing before concrete placement as required to prevent mortar leaks and maintain proper alignment.
9. Set edge forms or bulkheads and intermediate screed strips for slabs to obtain required elevations and contours in finished slab surface. Provide and secure units sufficiently strong to support types of screed strips by use of strike-off templates or accepted compacting type screeds
10. Coat contact surfaces of forms with accepted, nonresidual, low-VOC form-coating compound before reinforcement is placed.

©2016, Walker Parking Consultants/Engineers, Inc. All rights reserved.

11. Coat steel forms with non-staining, rust-preventive form oil or otherwise protect against rusting. Rust-stained steel formwork not acceptable.
12. For post-tensioned concrete, formwork shall remain in place until post-tensioning has been completed. Do not place additional loads on structure until concrete has been properly reshored.
13. For non-post-tensioned concrete, formwork shall remain in place until concrete has reached minimum two-thirds of 28-day strength. Do not place additional loads on structure until concrete has been properly reshored.
14. Clean and repair surfaces of forms to be re-used in Work. Split, frayed, delaminated or otherwise damaged form facing material will not be acceptable for exposed surfaces. Apply new form coating compound as specified for new formwork.
15. When forms are extended for successive concrete placement, thoroughly clean surfaces, remove fins and laitance, and tighten forms to close joints. Align and secure joint to avoid offsets. Do not use "patched" forms for exposed concrete surfaces, except as acceptable to Engineer/Architect.

WI 1.3 CONCRETE SHORES AND RESHORES (INCIDENTAL)

A. Scope of Work

1. Work consists of furnishing all labor, materials, equipment, supervision, and incidentals necessary to install temporary floor slab shoring and to maintain shores in place until restoration Work requiring shores and associated concrete has properly cured.

B. Materials

1. Shores shall be steel, rated at 4500 lb at 12 ft extension.

C. Execution

1. Comply with ACI 301 and ACI 347 for shoring and reshoring in multi-story construction, except as modified in this Section.
2. For purpose of calculations: Construction load = 50 psf; dead load = 85 psf.
3. Shore/Reshore loads on the structure shall not exceed 50 psf distributed load on the slab, and concentrated loads shall not exceed posted wheel loads or 2000 lbs., whichever is less. Concentrated bearing pressures shall not exceed 100 psi.
4. Shore/Reshore loads on concrete slab-on-grade shall not exceed 50 psf distributed load, and concentrated bearing pressures shall not exceed 1500 psi.
5. Shore/Reshore loads on asphalt slab-on-grade shall be distributed so as not to exceed bearing capacity, and with consideration of reduced capacity during extreme hot weather.
6. Shore/Reshore loads shall be distributed horizontally and/or distributed to more than one level to meet shore/reshore load limitations.
7. Shore/Reshore loads shall be distributed to multiple framing members (beams/joists/double tee stems) and extend beyond the immediate work area to ensure proper distribution of loads throughout the structure.

©2016, Walker Parking Consultants/Engineers, Inc. All rights reserved.

8. Prior to installation of shores, Contractor shall submit shoring scheme prepared and sealed by licensed professional engineer in Iowa.
9. Engineer/Architect will review shoring scheme for general conformance to requirements stated herein. If it does not conform, Contractor will be informed to resubmit another shoring scheme. See requirements of Division 1 Section, “Submittal Procedures,” Part 1 heading, “Submittal Procedures,” for limits to resubmittals.
10. Remove shores and reshore in planned sequence to avoid damage to partially cured concrete. Locate and provide adequate reshoring to safely support Work without excessive stress or deflection.
11. Keep reshores in place as required until heavy loads due to construction operations have been removed.
12. If during construction, modifications are necessary to accommodate other trades, revise and resubmit erection plan to Engineer/Architect for review.

WI 1.4 CONCRETE REINFORCEMENT (INCIDENTAL)

A. Scope of Work

1. Work consists of furnishing all labor, materials, equipment, supervision, and incidentals necessary to fabricate and install all mild steel reinforcement and epoxy coated reinforcement.

B. Materials

1. Reinforcement materials shall be as specified in ACI 301 “Standard Specifications for Structural Concrete.”
2. Welded wire reinforcement: provide mats only. Roll stock prohibited.
3. Epoxy Coating Materials for Reinforcement: ASTM A775 and A884:
4. Supplier shall be certified currently under CRSI Fusion Bonded Epoxy Coating Applicator Plant Certification Program.
5. Provide one of following epoxy coatings for reinforcement and steel accessories as noted on Drawings:

    a. "Scotchkote 413," 3M Company.
    b. "Nap-Gard 7-2709,” DuPont Powder Coatings, USA, Inc.
    c. "Epoxiplate R346 or R349," Armstrong Products Company.

6. Use patching material recommended by epoxy powder manufacturer, compatible with epoxy coating and inert in concrete. Acceptable:

    a. "Scotchkote 413 PC," 3M Company.
    b. “Armatec 110,” Sika Corporation.
    c. “EMACO P22,” Degussa Construction Systems Americas.
    d. “Corr Bond,” The Euclid Chemical Company.

©2016, Walker Parking Consultants/Engineers, Inc. All rights reserved.

7. Epoxy Coating for Existing Exposed Non-prestressed Steel Reinforcement or Welded wire reinforcement:

    a. “Sikadur 32 Hi-Mod," Sika Chemical Corp., Lyndhurst, NJ.
    b. “Concressive Liquid LPL,” Degussa Construction Systems Americas, Shakopee, MN.
    c. “Scotchkote 413 PC,” 3M Company.
    d. “Armatec 110,” Sika Corporation.
    e. “Euco 452,” The Euclid Chemical Company, Cleveland, OH.
    f. “Resi-Bond (J-58),” Dayton Superior Corporation, OH.

C. Execution

1. Work shall conform to requirements of ACI 301 “Standard Specifications for Structural Concrete,” ACI 315-80 “Details and Detailing of Concrete Reinforcement,” ACI 318 “Building Code Requirements for Reinforced Concrete,” and Concrete Reinforcing Steel Institute (CRSI), “Manual of Standard Practice.”
2. Submittals required include: Product data for proprietary materials and items, including reinforcement and forming accessories, admixtures, patching compounds, waterstops, joint systems, curing compounds, and others as requested by Engineer/Architect including, but not limited to:

    a. Manufacturer's product data and installation instructions for proprietary form coatings, manufactured form systems, ties, and accessories.
    b. Steel producer's certificates of mill analysis, tensile tests, and bend tests.
    c. Manufacturer's product data, specifications, and installation instructions for proprietary materials, welded and mechanical splices, and reinforcement accessories.
    d. Epoxy Coating for Reinforcement:

        1) Written certification from coating manufacturer that coating resin for reinforcement has been approved by National Bureau of Standards.
        2) Written information from coating manufacturer on proper use and application of coating resin.
        3) Coating applicator's written certification of results of quality control program.

    e. Submit all materials and methods for concrete curing to Engineer/Architect for approval before beginning concreting Work. Include certification of curing compound allowable moisture loss.

3. Store concrete reinforcement materials at site to prevent damage and accumulation of dirt or excessive rust.
4. Epoxy Coated Reinforcement:

    a. Contact areas of handling and hoisting systems shall be padded or be made of nylon or other acceptable material.
    b. Use spreader bars to lift bundles of coated steel to prevent bar-to-bar abrasion.

©2016, Walker Parking Consultants/Engineers, Inc. All rights reserved.

c. Pad bundling bands or fabricate of nylon or other acceptable material.
d. Store coated steel on padded or wooden cribbing.
e. Do not drag coated steel members.
f. After placement, restrict traffic on coated steel to prevent damage.

5. Reinforcement with any of following defects will be rejected:

a. Lengths, depths and bends exceeding CRSI fabrication tolerances.
b. Bends or kinks not indicated on Drawings or final Shop Drawings.
c. Reduced cross-section due to excessive rusting or other cause.

6. General: Comply with Concrete Reinforcing Steel Institute's recommended practice for "Placing Reinforcing Bars," for details and methods of reinforcement placement and supports and as herein specified.

a. Avoiding cutting or puncturing vapor retarder during reinforcement placement and concreting operations.
b. Examine conditions under which concrete reinforcement is to be placed, and immediately notify Engineer/Architect in writing of unsatisfactory conditions. Do not proceed with Work until unsatisfactory conditions have been corrected in acceptable manner.
c. Clean reinforcement of loose rust and mill scale, earth, ice, and other materials that reduce or destroy bond with concrete.
d. Fabricate reinforcement to conform to required shapes and dimensions, with fabrication tolerances complying with CRSI MSP. In case of fabricating errors, do not re-bend or straighten reinforcement in manner that will injure or weaken material.
e. Bends in reinforcement are standard 90° bends unless noted otherwise.
f. Reinforcement with any of following defects will be rejected:

1) Lengths, depths and bends exceeding CRSI fabrication tolerances.
2) Bends or kinks not indicated on Drawings or final Shop Drawings.
3) Reduced cross-section due to excessive rusting or other cause.

g. Perform all welding of mild steel reinforcement, metal inserts and connections with low hydrogen welding electrodes in accordance with AWS D1.4.
h. Epoxy coated reinforcement: Fabricator and applicator to provide installer with written instructions to handle, store and place epoxy coated reinforcement to prevent damage to coating.
i. Comply with ACI 301, Chapter 3 for placing reinforcement.
j. Use rebar chairs and accessories to hold all reinforcing positively in place. Provide rebar chairs at all formed surfaces, both vertical and horizontal, to maintain minimum specified cover. Set wire ties so ends are directed into concrete, not toward exposed concrete surfaces. Maximum spacing of chairs and accessories shall be per CRSI Manual of Standard Practice. In situations not covered by CRSI, provide support at 4 ft on center maximum each way.

©2016, Walker Parking Consultants/Engineers, Inc. All rights reserved.

k. Install welded wire reinforcement in as long lengths as practicable. Lap adjoining pieces at least one full mesh and lace splices with wire. Offset laps of adjoining widths to prevent continuous laps in either direction.

l. Splices:

1) Provide standard reinforcement splices by lapping ends, placing bars in contact, and tying tightly with wire. Comply with requirements of ACI 318 for minimum lap of spliced bars.

2) For mechanical tension splices of reinforcement:

a) Column bar lengths shall not exceed 30 ft between splices. In any bar, no splices shall occur at any floor level.

b) Exercise care to assure that no reduction of cross-sectional area of reinforcement occurs.

c) Use Barsplice Products, Inc., Bar-Grip or Grip-Twist, NMB Splice Sleeve, or Erico LENTON splices.

d) For all mechanical splices, perform splicing in strict accordance with manufacturer's requirements and instructions.

e) All splices to develop 125% of specified yield strength of bars, or of smaller bar in transition splices.

f) Stagger splices in adjacent bars.

g) Except where shown on Drawings, welding of reinforcement prohibited without prior written authorization by Engineer/Architect.

3) Compression splices: Mechanically coupled splices in accordance with ACI 318, Chapter 12.

m. Epoxy Coated Reinforcement:

1) Rest epoxy coated steel members supported from formwork on coated wire bar supports, or on bar supports made of dielectric material or other suitable material.

2) Coat wire bar supports with dielectric material for minimum distance of 2 in. from point of contact with coated steel member.

3) Fasten epoxy-coated steel members with nylon-, epoxy-, or plastic-coated tie wire, or other suitable material acceptable to Engineer/Architect.

4) Mechanical connections, when required, shall be installed in accordance with splice device manufacturer's recommendations. Repair any damage to coating.

5) All parts of mechanical connections on epoxy-coated steel, including steel splice sleeves, bolts, and nuts shall be coated with same material used for repair of coating damage.

6) Do not cut epoxy-coated steel unless permitted by Engineer/Architect. When cut, coat ends with material used for repair of coating damage.

7) All welding of epoxy-coated steel shall conform to AWS D1.4.

8) Adequate ventilation shall be provided when welding epoxy-coated steel.

©2016, Walker Parking Consultants/Engineers, Inc. All rights reserved.

9) After welding, repair coating damage as specified in Part 3 heading "Quality Control Testing During Construction," paragraph "Epoxy Coated Material."

WI 1.5 TEMPORARY SIGNAGE (INCIDENTAL)

A. Scope of Work

1. Work consists of furnishing all labor, materials, equipment and supervision necessary to provide and install and remove following completion of project, temporary signage as required for traffic control and user information during construction and as required by Owner/Engineer.

B. Materials

1. Temporary signage shall meet following minimum requirements:

a. Minimum size:
b. Backing material: 0.5 in. medium density overlay plywood.
c. Colors:

1) Background: medium orange or white.
2) Symbols/Lettering: black

d. Lettering: silk screened or die-cut.

1) Font Style: Helvetica or similar.
2) Size: 2 in. high minimum for pedestrian information; 4 in. high minimum for traffic information.

C. Execution

1. Mounting height: 5 ft. to bottom of sign. Provide mounting brackets as required.
2. Contractor shall submit shop drawings detailing sign size, layout, colors, and mounting schemes for approval prior to fabricating signs and mounting brackets.
3. Typical regulatory signs (that is, STOP, YIELD, etc.) and "Handicap" signs shall conform to all Federal, state, and local requirements for sizes, materials, and colors.

WI 3.0 CONCRETE FLOOR REPAIR

A. Scope of Work

1. This Work consists of furnishing all labor, materials, equipment, supervision and incidentals necessary to locate existing spalls, locate and remove delaminated, unsound and sound concrete, prepare cavities and install patching material to restore floor slab to original condition and appearance. Refer to Detail Series 3.0 for specific requirements.

©2016, Walker Parking Consultants/Engineers, Inc. All rights reserved.

B. Materials

1. Concrete repair materials shall be as specified in Section "Silica Modified Concrete" and/or Section "Latex Modified Concrete and Mortar."
2. Conventional steel reinforcement shall be as specified in Work Item "Concrete Reinforcement."

C. Execution

1. Contractor shall locate and mark all Work areas as specified in Section "Surface Preparation for Patching," Article "Inspection."
2. Procedure for delaminated, spalled and unsound concrete removal shall be as specified in Section "Surface Preparation for Patching," Article " Preparation." Remove all unsound concrete within marked boundary prior to sawcutting and preparation of patch edges.
3. Engineer shall inspect all cavities for condition according to Section "Surface Preparation for Patching," Article "Inspection of Repair Preparation."
4. All steel exposed within cavities shall be cleaned to bare metal by sandblasting as specified in Section "Surface Preparation for Patching," Article "Cleaning of Reinforcement within Delamination and Spall Cavities," and damaged and defective reinforcement replaced as specified in Section "Surface Preparation for Patching," Article "Reinforcement and Embedded Materials in Repair Areas." Exposed steel shall be epoxy coated with an approved epoxy resin as specified in Work Item "Concrete Reinforcement."
5. Contractor shall prepare cavities for patch placement as specified in Section "Surface Preparation for Patching," Article "Preparation of Cavity for Patch Placement."
6. Patch materials and associated reference specifications are listed in Work Item "Concrete Floor Repair," Article " Materials," above. Patch installation procedures shall be in accordance with referenced specifications for selected material.
7. After installation and cure of Patch, Contractor shall provde Traffic Topping as specified in section "Traffic Topping – Recoat at Repairs (Complete System)."

WI 3.2 FLOOR REPAIR – SLAB-ON-GRADE

A. Refer to Work Item "Concrete Floor Repair" for scope of Work, materials and procedure associated with this Work Item. Refer to Detail 3.2.0 for specific requirements.

WI 3.3 FLOOR REPAIR – PARTIAL DEPTH

A. Refer to Work Item "Concrete Floor Repair" for scope of Work, materials and procedure associated with this Work Item. Refer to Detail 3.3.0 for specific requirements.

©2016, Walker Parking Consultants/Engineers, Inc. All rights reserved.

WI 3.4 FLOOR REPAIR - FULL DEPTH

A. Scope of Work

1. This Work consists of furnishing all labor, materials, equipment, supervision and incidentals necessary to locate and remove full depth unsound and sound floor concrete, prepare cavity, and install patching material to restore floor to original integrity and appearance. Refer to Detail 3.4.0 for specific requirements.

B. Materials

1. Concrete repair materials shall be as specified in Section "Silica Modified Concrete" and/or Section "Latex Modified Concrete and Mortar."
2. Conventional steel reinforcement shall be as specified in Work Item "Concrete Reinforcement."

C. Execution

1. Contractor shall locate and mark all Work areas as specified in Section "Surface Preparation for Patching," Article "Inspection."
2. All concrete shall be removed from within marked boundaries until sound concrete is reached on all sides.
3. Sawcut shall then be made approximately 3 in. from edge of cavity. This sawcut shall be to depth of 0.75 in. and all edges shall be straight. Underside of slab shall have its repair edge ground to depth of 0.5 in. Patches shall be as square or rectangular-shaped as practical. All concrete within depth of sawcut contained within the repair area shall be removed to minimum depth of 1.5 in. including the 0.75 in. sawcut edge at top surface of floor slab. Also see Section Surface Preparation for Patching," Article "Preparation."
4. Engineer shall inspect all cavities for condition according to Section "Surface Preparation for Patching," Article "Inspection of Repair Preparation."
5. All steel exposed within cavities shall be cleaned to bare metal by sandblasting according to Section "Surface Preparation for Patching," Article "Cleaning of Reinforcement within Delamination and Spall Cavities," and damaged and defective reinforcement replaced as specified in Section "Surface Preparation for Patching," Article "Reinforcement and Embedded Materials in Repair Areas." Exposed steel shall be epoxy coated with an approved epoxy resin as specified in Work Item "Concrete Reinforcement."
6. Contractor shall prepare cavities for patch placement as specified in Section "Surface Preparation for Patching," Article "Preparation of Cavity for Patch Placement."
7. Patch materials and associated reference specifications are listed in Work Item "Floor Repair - Full Depth," Article "Materials," above. Patch installation procedures shall be in accordance with referenced specifications for selected material.
8. After installation and cure of Patch, Contractor shall provde Traffic Topping as specified in section "Traffic Topping – Recoat at Repairs (Complete System)."

©2016, Walker Parking Consultants/Engineers, Inc. All rights reserved.

WI 3.5 FLOOR REPAIR – FULL DEPTH AT P/T REPAIR

A. Refer to Work Item "Floor Repair – Full Depth" for scope of Work, materials and procedure associated with this Work Item. Refer to Details 3.4.0, 21.6.0 and 21.6.1 for specific requirements.

B. Coordination with Work Item series 21.0, as well as furnishing and installation of mild supplemental reinforcing required of Work Item Series 21.0 is included in this Work Item.

WI 3.6 FLOOR REPAIR – FULL DEPTH AT P/T REPAIR WITH CURB

A. Refer to Work Item "Floor Repair – Full Depth" for scope of Work, materials and procedure associated with this Work Item. Refer to Details 3.4.0 (similar), 21.3.0, 21.3.1 and 21.4.0 for specific requirements.

B. Coordination with Work Item series 21.0, as well as furnishing and installation of mild supplemental reinforcing required of Work Item Series 21.0 is included in this Work Item.

WI 3.7 FLOOR REPAIR – STAIR TREADS

A. Refer to Work Item "Concrete Floor Repair" for scope of Work, materials and procedure associated with this Work Item. Refer to Detail 3.7.0 for specific requirements.

WI 4.0 CONCRETE CEILING REPAIR

A. Scope of Work

1. Work consists of furnishing all labor, materials, equipment, supervision and incidentals necessary to locate existing spalls, locate and remove delaminated and unsound concrete, prepare cavities and install patching material to restore ceilings to original condition and appearance. Refer to Detail Series 4.0 for specific requirements.

B. Materials

1. Trowel applied patching material shall be as specified in Section "Trowel Applied Mortar." This material may be used for shallow removal and repair Work Items only.
2. Pressure applied concrete repair material shall be as specified in Section "Shotcrete."

C. Execution

1. Contractor shall locate and mark all Work areas as specified in Section "Surface Preparation for Patching," Article "Inspection."

©2016, Walker Parking Consultants/Engineers, Inc. All rights reserved.

2. Procedure for delaminated, spalled and unsound concrete removal shall be as specified in Section "Surface Preparation for Patching," Article "Preparation."
3. Engineer shall inspect all cavities for condition according to Section "Surface Preparation for Patching," Article "Inspection of Repair Preparation."
4. All steel exposed within cavities shall be cleaned to bare metal by sandblasting as specified in Section "Surface Preparation for Patching," Article "Cleaning of Reinforcement within Delamination and Spall Cavities," and damaged and defective reinforcement replaced as specified in Section "Surface Preparation for Patching," Article "Reinforcement and Embedded Materials in Repair Areas." Exposed steel shall be epoxy coated with an approved epoxy resin as specified in Work Item "Concrete Reinforcement."
5. Contractor shall prepare cavities for patch placement in accordance with Section "Surface Preparation for Patching," Article "Preparation of Cavity for Patch Placement."
6. Patch materials and associated reference specifications are listed in Work Item "Concrete Ceiling Repair," Article "Materials," above. Patch installation procedures shall be in accordance with referenced specifications for selected material.
7. Contractor shall take care to protect adjacent areas from overspray if "Shotcrete" is used. Area adjacent to repair shall be cleaned to Owner's satisfaction prior to leaving site

WI 4.1 CEILING REPAIR - PARTIAL DEPTH

A. Refer to Work Item "Concrete Ceiling Repair" for scope of Work, materials and procedure associated with this Work Item. Refer to Detail 4.3.0 for specific requirements.

WI 5.0 CONCRETE BEAM REPAIR

A. Scope of Work

1. Work consists of furnishing all labor, materials, equipment, supervision and incidentals including shoring necessary to locate existing spalls, locate and remove delaminated, unsound, and sound concrete, prepare cavities and install patching materials to restore concrete beams and joists to original condition and appearance. Refer to Detail Series 5.0 for specific requirements.

B. Materials

1. Pressure applied concrete repair materials shall be as specified in Section "Shotcrete."
2. Latex modified concrete materials shall be as specified in Section "Latex Modified Concrete and Mortar."
3. Trowel applied patching material shall be as specified in Section "Trowel Applied Mortar."

©2016, Walker Parking Consultants/Engineers, Inc. All rights reserved.

C. Execution

1. Contractor shall locate and mark all Work areas as specified in Section "Surface Preparation for Patching," Article "Inspection." Contractor shall identify all critical repair work areas prior to start of work. Engineer shall verify critical repair area identification.
2. Procedure for delaminated, spalled and unsound concrete removal shall be as specified in Section "Surface Preparation for Patching," Article "Preparation."
3. Engineer shall inspect all cavities for condition according to Section "Surface Preparation for Patching," Article "Inspection of Repair Preparation."
4. All steel exposed within cavities shall be cleaned to bare metal by sandblasting according to Section "Surface Preparation for Patching," Article "Cleaning of Reinforcement within Delamination and Spall Cavities," and damaged and defective reinforcement replaced as specified in Section "Surface Preparation for Patching," Article "Reinforcement and Embedded Materials in Repair Areas." Exposed steel shall be epoxy coated with an approved epoxy resin as specified in Work Item "Concrete Reinforcement."
5. Contractor shall prepare cavities for patch placement as specified in Section "Surface Preparation for Patching," Article "Preparation of Cavity for Patch Placement."
6. Repairs in critical areas shall be performed in accordance with Section "Shotcrete" or cast in place in accordance with Section "Latex Modified Concrete and Mortar." Shoring support shall be provided as necessary and in accordance with Work Item "Concrete Shores and Reshores."
7. Patch materials and associated reference specifications for patches in non-critical areas are listed in Work Item "Concrete Beam and Joist Repair," Article "Materials," above. Patch installation procedures shall be in accordance with referenced specifications for selected material.
8. Contractor shall take care to protect adjacent areas from overspray if Section "Shotcrete" is used. Area adjacent to repair shall be cleaned to Owner's satisfaction prior to leaving site.

WI 5.2 BEAM REPAIR - PARTIAL DEPTH

A. Refer to Work Item "Concrete Beam Repair" for scope of Work, materials and procedure associated with this Work Item. Refer to Detail 5.1.0 for specific requirements.

WI 5.3 BEAM REPAIR – WALL HAUNCH

A. Refer to Work Item "Concrete Beam Repair" for scope of Work, materials and procedure associated with this Work Item. Refer to Detail 5.3.0 for specific requirements.

©2016, Walker Parking Consultants/Engineers, Inc. All rights reserved.

WI 6.0 CONCRETE COLUMN REPAIR

A. Scope of Work

1. Work consists of furnishing all labor, materials, equipment, supervision and incidentals including shoring necessary to locate existing spalls, locate and remove delaminated and unsound concrete, prepare cavities and install patching materials to restore concrete columns to original condition and appearance. Refer to Detail Series 6.0 for specific requirements.

B. Materials

1. Concrete repair materials shall be as specified in Section "Cast-in-Place Concrete and/or Section “Latex Modified Concrete and Mortar."
2. Pressure applied concrete repair materials shall be as specified in Section "Shotcrete."
3. Trowel applied patching material shall be as specified in Section "Trowel Applied Mortar." This material may be used for shallow removal and repair Work Item only.

C. Execution

1. Contractor shall locate and mark all Work areas as specified in Section "Surface Preparation for Patching," Article "Inspection."
2. Procedure for delaminated and unsound concrete removal shall be as specified in Section "Surface Preparation for Patching," Article "Preparation."
3. Engineer/Architect shall inspect all cavities for condition according to Section "Surface Preparation for Patching," Article "Inspection of Repair Preparation."
4. All steel exposed within cavities shall be cleaned to bare metal by sandblasting according to Section "Surface Preparation for Patching," Article "Cleaning of Reinforcement within Delamination and Spall Cavities," and damaged and defective reinforcement replaced as specified in Section "Surface Preparation for Patching," Article "Reinforcement and Embedded Materials in Repair Areas." Exposed steel shall be coated with an approved corrosion inhibitor as specified in Section "Concrete Reinforcement."
5. Contractor shall prepare cavities for patch placement as specified in Section "Surface Preparation for Patching," Article "Preparation of Cavity for Patch Placement."
6. Patch materials and associated reference specifications are listed in Work Item "Concrete Column Repair," Article "Materials," above. Patch installation procedures shall be in accordance with referenced specifications for selected material.
7. Contractor shall take care to protect adjacent areas from overspray if "Shotcrete" is used. Area adjacent to repair shall be cleaned to Owner's satisfaction prior to leaving site.

©2016, Walker Parking Consultants/Engineers, Inc. All rights reserved.

WI 6.3 COLUMN REPAIR – HAUNCH

A. Refer to Work Item “Concrete Column Repair” for scope of Work, materials and procedure associated with this Work Item. Refer to Detail 6.3.0 for specific requirements.

WI 7.0 CONCRETE WALL REPAIR

A. Scope of Work

1. Work consists of furnishing all labor, materials, equipment, supervision and incidentals necessary to locate existing spalls, locate and remove delaminated, unsound, and sound concrete, prepare cavities and place patching materials to restore concrete walls to original condition and appearance. Refer to Detail Series 7.0 for specific requirements.

B. Materials

1. Trowel applied patching material shall be as specified in Section "Trowel Applied Mortar."
2. Pressure applied concrete repair materials shall be as specified in Section "Shotcrete."

C. Execution

1. Contractor shall locate and mark all Work areas as specified in Section "Surface Preparation for Patching," Article "Inspection."
2. Procedure for delaminated, spalled and unsound concrete removal shall be as specified in Section "Surface Preparation for Patching," Article "Preparation."
3. Engineer shall inspect all cavities for condition according to Section "Surface Preparation for Patching," Article "Inspection of Repair Preparation."
4. All steel exposed within cavities shall be cleaned to bare metal by sandblasting according to Section "Surface Preparation for Patching," Article "Cleaning of Reinforcement within Delamination and Spall Cavities," and damaged and defective reinforcement replaced as specified in Section "Surface Preparation for Patching," Article "Reinforcement and Embedded Materials in Repair Areas." Exposed steel shall be epoxy coated with an approved epoxy resin as specified in Work Item “Concrete Reinforcement.”
5. Contractor shall prepare cavities for patch placement as specified in Section "Surface Preparation for Patching," Article "Preparation of Cavity for Patch Placement."
6. Patch materials and associated reference specifications are listed in Work Item "Concrete Wall Repair," Article "Materials," above. Patch installation procedures shall be in accordance with referenced specifications for selected material.
7. Contractor shall take care to protect adjacent areas from overspray if "Shotcrete" is used. Area adjacent to repair shall be cleaned to Owner's satisfaction prior to leaving site.

©2016, Walker Parking Consultants/Engineers, Inc. All rights reserved.

WI 7.3 WALL REPAIR - PARTIAL DEPTH / SHALLOW

A. Refer to Work Item "Concrete Wall Repair" for scope of Work, materials and procedure associated with this Work Item. Refer to Detail 7.3.0 for specific requirements.

WI 10.0 EXPANSION JOINT REPAIR AND REPLACEMENT

A. Scope of Work

1. Work consists of furnishing all labor, materials, equipment, supervision and incidentals necessary to remove existing expansion joints, prepare adjacent concrete and furnish and install new expansion joint system. Refer to Detail Series 10.0 for specific requirements.

B. Materials

1. Expansion joint system materials shall be as specified in Section "Expansion Joints System," installed in strict accordance with manufacturer's recommendations.
2. Concrete repair materials shall be as specified in Section "Latex Modified Concrete and Mortar."
3. Trowel applied material shall be as specified in Section "Trowel Applied Mortar."

C. Execution

1. Contractor shall remove existing expansion materials in manner that minimizes damage to adjacent concrete. Alterations to existing expansion joint blockout required for installation of new expansion joint system shall be performed in accordance with Work Item "Floor Repair - Provide Expansion Joint Blockout" and Section "Surface Preparation for Patching."
2. Joint materials and associated reference specifications are listed in Work Item "Expansion Joint Repair and Replacement," Article "Materials," above. Joint installation procedures shall be in accordance with referenced specifications and manufacturer's recommendations.
3. In-place testing: Prior to opening to traffic, test joint seal for leaks with 2 in. water depth maintained continuously for 12 hrs. Repair leaks revealed by examination of seal underside. Repeat test and repairs until all leaks stopped for full 12 hrs.

WI 10.4 EXPANSION JOINT – METAL EDGED

A. Refer to Work Item "Expansion Joint Repair and Replacement" for scope of Work, materials and procedure associated with this Work Item. Refer to Detail 10.4 for specific requirements.

WI 11.0 CRACK AND JOINT REPAIR

©2016, Walker Parking Consultants/Engineers, Inc. All rights reserved.

WI 11.1 SEAL CRACKS AND JOINTS

A. Scope of Work

1. Work consists of furnishing all labor, materials, equipment, supervision and incidentals necessary to locate, prepare and seal random cracks and unsealed construction joints in concrete floor and/or topping. Refer to Detail 11.1.0 for specific requirements.

B. Materials

1. Approved materials for use in this Work are specified in Section "Waterproofing System."

C. Execution

1. Contractor shall thoroughly clean and inspect concrete slabs and/or topping for cracks and unsealed construction joints. Those identified as either greater than 0.03 in. wide or showing evidence of water and/or salt staining on ceiling below shall be sealed. All cracks and joints identified for repair shall be marked with chalk to aid in precision routing. Obtain depths to top reinforcing bars and P-T tendons in area of repair by use of a pachometer. Determine depth of electrical conduit (metal or plastic). Do not exceed this depth of routing where the crack to be repaired crosses the embedded items. Damage to embedded items will require repair or replacement at no cost to the Owner.
2. Cracks and construction joints shall be ground or sawcut to an adequate width and depth as required by Work Item Detail. Routing shall be performed by mechanized device that has positive mechanical control over depth and alignment of cut. Hand held power grinders with abrasive disks shall not be used on control/construction joints, but may be used on random cracks.
3. Cavities shall be thoroughly cleaned by either sandblasting or grinding to remove all laitance, unsound concrete and curing compounds which may interfere with adhesion. Groove shall be air blasted to remove remaining debris.
4. Sealant materials and associated reference specifications are listed in Work Item "Seal Cracks and Construction Joints," Article "Materials," above. Sealant installation procedures shall be in accordance with referenced specifications for selected material.
5. Traffic topping manufacturer shall specify joint sealant type compatible with traffic topping. Repair to traffic topping system shall be incidental to repair of failed crack/joint; refer to specification section “Traffic Topping – Recoat at Repairs (Complete System).”

WI 11.2 REPAIR CRACK/JOINT SEALANT

A. Scope of Work

1. Work consists of furnishing all labor, materials, equipment, supervision and incidentals necessary to locate and mark failed joint sealant, remove existing

©2016, Walker Parking Consultants/Engineers, Inc. All rights reserved.

sealant, prepare edges and reseal joints and cracks. Refer to Detail 11.2.0 for specific requirements.

B. Materials

1. Approved materials for use in this Work are specified in Section "Waterproofing System."

C. Execution

1. Contractor shall locate failed crack/joint sealant by visual inspection.
2. Contractor shall remove existing sealant from joints and/or cracks.
3. When existing joint dimensions do not conform to Detail 11.2.0, joints shall be routed or sawcut to an adequate width and depth as required by Work Item Detail. Routing shall be performed by mechanized device that has positive mechanical control over depth and alignment of cut.
4. Cavities shall be thoroughly cleaned by either sandblasting or grinding to remove all remaining sealant and unsound concrete which may interfere with adhesion. Groove shall also be air blasted to remove remaining debris.
5. Sealant materials and associated reference specifications are listed in Work Item "Repair Crack/Joint Sealant," Article "Materials," above. Sealant installation procedures shall be in accordance with referenced specifications for selected material.
6. Traffic topping manufacturer shall specify joint sealant type compatible with traffic topping. Repair to traffic topping system shall be incidental to repair of failed crack/joint; refer to specification section “Traffic Topping – Recoat at Repairs (Complete System).”

WI 11.7 COVE SEALANT

A. Scope of Work

1. Work consists of furnishing all labor, materials, equipment, supervision and incidentals necessary to prepare concrete surfaces and install cove sealant between floor and vertical surfaces as shown on Drawings. Refer to Detail 11.7.0 for specific requirements.

B. Materials

1. Joint sealant materials shall be as specified in Section "Waterproofing System."
2. Joint sealant material shall be compatible with traffic topping materials specified in Section "Waterproofing System."

C. Execution

1. Wall-floor intersection to be sealed shall be thoroughly cleaned by sandblasting to remove all contaminants and foreign material.

©2016, Walker Parking Consultants/Engineers, Inc. All rights reserved.

2. Entire Work area shall then be cleaned with compressed air to assure that all loose particles have been removed and that intersection is dry.
3. Properly prepared intersection shall be coated evenly and completely with joint primer material on each of intersecting faces in accordance with sealant manufacturer's recommendations.
4. After primer has cured, apply cove sealant to intersection such that sealant extends 0.75 in. onto each of intersecting faces.
5. Work cove sealant into joint so that all air is removed and tool to concave shape such that minimum throat dimension of no less than 0.5 in. is maintained.
6. Remove excess sealant and allow to cure.
7. Apply coating on horizontal and vertical surfaces where shown on Drawings in even layers in strict accordance with manufacturer's recommendations. Sealant material and associated reference specifications are listed in Work Item "Cove Sealant," Article "Materials," above for traffic topping coating materials and installation requirements.

WI 16.0 TRAFFIC TOPPING

A. Scope of Work

1. Work consists of furnishing all labor, materials, equipment, supervision and incidentals necessary to prepare existing floor surface and install traffic topping as shown on Detail 16.1.0 and Drawings. Coating of all vertical surfaces within Work area shall be incidental to installation of traffic topping.

B. Materials

1. Approved materials for use in this Work are as specified in Section "Waterproofing System."

C. Execution

1. Floor surface preparation shall be performed by coating system applicator or under its direct supervision. Shotblast surface preparation is required for floors.
2. Traffic topping shall be installed by licensed applicators in strict accordance with manufacturer's recommendations and referenced specification section listed in Work Item "Traffic Topping," Article "Materials," above.
3. Coating system shall be thoroughly cured prior to Work areas being returned to service.

WI 16.3A&B TRAFFIC TOPPING – RECOAT AT REPAIRS (COMPLETE SYSTEM) (INCIDENTAL)

A. Scope of Work

1. Work consists of furnishing all labor, materials, equipment, supervision and incidentals necessary to prepare and recoat the existing traffic topping as shown on Drawings. Work Item 16.3A occurs at floor repair locations Work Item Series

©2016, Walker Parking Consultants/Engineers, Inc. All rights reserved.

3.0 and is incidental to the floor repair work item. Work Item 16.3B occurs at locations indicated on the plan sheets. Refer to Details 16.3 and 16.3.1 for specific requirements.

B. Materials

1. Approved materials for use in this Work are as specified in Section "Waterproofing System." Traffic topping recoating material shall be compatible with existing system.
2. Prior to start of Work, obtain written approval from traffic topping manufacturer that the existing surface is acceptable for application of proposed traffic topping and that the membrane is compatible with existing system.

C. Execution

1. Preparation of existing traffic topping membrane shall be in strict accordance with manufacturer's recommendations and Section "Waterproofing System." Floor surface preparation shall be performed by coating system applicator or under its direct supervision.
2. Traffic topping shall be installed by licensed applicators in strict accordance with manufacturer's recommendations and Section “Waterproofing System.”
3. Completely solvent-wash all existing traffic coating that is bonded to concrete slab just prior to application of new traffic topping.
4. All loose existing coating shall be removed and exposed concrete surfaces prepared in accordance with manufacturer's requirements. See Section "Waterproofing System."
5. Prior to recoating the area, any patches and/or bare concrete areas shall be coated with a base coat, an appropriate number of intermediate coats, and a wearing coat to bring the new membrane flush with the level of the existing, adjacent membrane. Refer to detail 16.3.1.
6. Coating system shall be thoroughly cured prior to returning work areas to service.

WI 16.11 TRAFFIC TOPPING – WEAR AND TOP COAT

A. Refer to Work Item "Traffic Topping" for scope of Work, materials and procedure associated with this Work Item.

WI 21.0 P/T SYSTEM REPAIR – MONOSTRAND

A. Scope of Work

1. This work consists of furnishing all labor, materials, equipment, supervision and incidentals necessary to make P/T tendon splice repairs and P/T end anchorage repairs to the monostrand post-tensioning system. Refer to Detail series 21.0 for specific requirements. Refer to Section “Unbonded Post-Tensioned Concrete” for further requirements.

©2016, Walker Parking Consultants/Engineers, Inc. All rights reserved.

2. The furnishing and installing of reinforcing steel as shown on the Detail Series 21.0 and concrete removals and replacement is not included in this work and shall be performed and paid for under Work Items 3.5 and 3.6.

B. Materials

1. Post-Tensioning materials and related materials shall be as specified in Section “Unbonded Post-Tensioned Concrete”.
2. Reinforcing steel shall be epoxy coated as specified in Work Item “Concrete Reinforcement.".
3. Epoxy adhesive for reinforcing dowels shall be Hilti HY-150.

C. Prequalified Installers:

1. Refer to Section “Unbonded Post-Tensioned Concrete”.

D. Prequalified Suppliers:

1. Refer to Section “Unbonded Post-Tensioned Concrete”.

E. Execution

1. Prior to concrete removals, submit shoring and bracing plan for engineer review. Engineer review does not absolve contractor’s total responsibility for providing the necessary shoring and bracing to maintain the stability of the structure and individual elements.
2. Refer to Work Item series 21.0 and “P/T General Notes” on drawings for additional requirements.
3. Below is a general procedure for P/T tendon repairs. The actual repair procedure for each repair location may vary depending on existing conditions and shall be reviewed by the Engineer. Contractor shall coordinate with Engineer.

    a. Locate damaged tendon, measure and record length between anchor points.
    b. Measure and record cable separation, failure point and offset from nearest column face. Mark adjacent floor slab beyond concrete removal boundary to reference the failed tendon end points.
    c. Mark cable path on floor surface between anchors with marking paint.
    d. Inspect floor slab top and bottom for cracks, delaminations, and spalls.
    e. Remove all unsound and delaminated concrete only from floor and ceiling surfaces along tendon patch (see item 1 above).

        1) Closely inspect the exposed tendon for damage at all concrete removal sites. If no damage is observed, proceed to step F. If damage is observed, comply with step 2 below.
        2) Mark all damaged points for inspection by Engineer. Do not proceed with further concrete removals until after Engineer’s inspection and approval.

©2016, Walker Parking Consultants/Engineers, Inc. All rights reserved.

f. As directed by the Engineer, perform full depth removal at tendon anchorage to expose only the nonstressed side of the anchor plate. Excavate the anchorage nearest the failure point first then, excavate the opposite end. Inspect the anchorage for damage. Note that the tendon will probably retain some residual stress from corrosion lock up at the tendon high points. CONTINUE TO USE EXTRA CAUTION DURING CONCRETE REMOVALS**.**

g. Coordinate inspection of end anchors by Engineer.

h. As directed by the Engineer, continue partial concrete removals at tendon high points adjacent to the tendon failure locations. Removal should begin at the high point (closest to the failure) and work successively towards the nearest exposed anchor. Perform removals a safe distance away from end anchors and intermediate anchors. Perform removals so as to systematically detension and free up each tendon in small sections between removal points. The Engineer may direct termination of concrete removals if exposed tendons are found to be relaxed and free of corrosion. Cease removals as the Engineer directs, or when damaged tendon is released along its entire length.

i. Perform remaining concrete removals both partial and full depth to accommodate tendon splicing and new end anchor installation.

j. Engineer will determine location, type and extent of tendon repair.

k. Install splice couplings, end anchors, sheathing, new tendons and reinforcing steel per the applicable Work Item and in accordance with Section “Unbonded Post-Tensioned Concrete”. Cleaning and epoxy coating of all exposed reinforcing steel and P/T materials is incidental to concrete work.

l. Install patch concrete both partial and full depth at all locations except at stressing pockets and splice couplings. Concrete work shall be performed and paid for under Work Item series 3.0 or 4.0 as applicable.

m. Stress tendon when concrete has achieved 75 percent of required 28-day compression strength. Do not trim tendons until Engineer has approved stressing logs. Additional stressing shall be performed as required by Engineer and is incidental to the work.

n. Install patch concrete at stressing pocket and splice coupling locations.

o. Refer to Section “Unbonded Post-Tensioned Concrete” for additional requirements.

WI 21.2 PROTECT EXPOSED P/T TENDON(S) (INCIDENTAL)

A. Scope of Work

1. This work consists of furnishing all labor, materials, equipment, supervision and incidentals necessary to remove damaged tendon sheathing, re-grease (or epoxy coat tendons as approved by Engineer) in damaged area and install new sheathing. Refer to Detail 21.2.0 for specific requirements. This Work Item shall be incidental or part of Work Item series 3.0.

2. Concrete work performed in association with this work will be paid separately under Work Item series 3.0.

©2016, Walker Parking Consultants/Engineers, Inc. All rights reserved.

B. Materials

1. Refer to Section “Unbonded Post-Tensioned Concrete”.

C. Execution

1. Remove damaged sheathing materials from exposed tendon.
2. Grease coating:

   a. Apply additional corrosion-inhibiting grease over the damaged area to completely fill any void or surface depression caused by the sheathing damage.

3. Epoxy coating option (use only as approved by Engineer).

   a. Clean tendon to remove grease residue from exposed tendon.
   b. Apply uniform coating of epoxy to exposed tendon.

4. Install split sheathing over exposed tendon. Sheathing shall overlap existing sheathing by at least two inches at each end. Sheathing shall be oriented such that the split is toward the bottom.
5. Tape entire length of repair, spirally wrapping tape around sheathing to provide at least two layers of tape. Taping shall overlap existing sheathing by 2 in. at each end.

WI 21.3 REPLACE P/T (LIVE) END ANCHORAGE

A. Scope of Work

1. This work consists of furnishing all labor, materials, equipment, supervision and incidentals necessary to remove existing tendon anchorage system, install new reinforcement, install new tendon anchorage system, and re-tension tendon to required stresses. Concrete repair work is not part of this Work Item. Concrete and mild reinforcing work performed in association with this work will be paid separately under Work Item 3.5. Refer to Detail series 21.3.0 for specific requirements.

B. Materials

1. Refer to WI 21.0 “P/T System Repair Monostrand”, Article “Materials” and Section “Unbonded Post-Tensioned Concrete”.

C. Execution

1. Detension any remaining wires in tendons designated for repair. Remove existing end anchorage system.
2. Install new plastic-coated steel end anchor and install epoxy coated reinforcement as shown in Details at stressing side of end anchor.
3. Grease, install trumpet and wrap new or existing tendon at end anchor repair area in accordance with WI 21.2 and is incidental to this work.

©2016, Walker Parking Consultants/Engineers, Inc. All rights reserved.

4. Place concrete at bearing side of end anchor. After concrete has reached specified strength, tension tendon to specified stresses and lock off. Restressing due to tendon lock-up or additional tendon failures during stressing is incidental to this work.
5. After engineer has approved stressing records, install epoxy coated reinforcement and place concrete at non-bearing side of end anchor.
6. Refer to WI 21.0 and Section "Unbonded Post-Tensioned Concrete" for additional requirements.

WI 21.4 REPLACE P/T (DEAD) END ANCHORAGE

A. Scope of Work

1. This work consists of furnishing al labor, materials, equipment, supervision and incidentals necessary to remove existing tendon anchorage system, install reinforcement, and install new tendon anchorage system. Stressing of the tendon is not part of this work but will occur at a different location along the tendon per WI 21.3, 21.6 or 21.7. Concrete and mild reinforcing work performed in association with this work will be paid separately under Work Item series 3.0. Refer to Detail series 21.4.0 for specific requirements.

B. Materials

1. Refer to WI 21.0 "P/T System Repair Monstrand", Article "Materials" and Section "Unbonded Post-Tensioned Concrete".

C. Execution

1. Detension any remaining wires in tendons designated for repair. Remove existing end anchor.
2. Install new plastic-coated end anchor and install epoxy coated reinforcement as shown in Details.
3. Grease, install trumpet and wrap new or existing tendon at end anchor repair area in accordance with WI 21.2 and is incidental to this work.
4. Place concrete in repair area. After concrete has reached specified strength, tension tendon to specified stresses. Stressing operations is not included in WI 21.4.
5. Refer to WI 21.0 and Section "Unbonded Post-Tensioned Concrete" for additional requirements.

WI 21.6 TENDON SPLICE COUPLING (CENTER-PULL)

A. Scope of Work

1. This work consists of furnishing all labor, materials, equipment, supervision and incidentals necessary to install a center-pull splice coupling for splicing and stressing of a tendon. Concrete and mild reinforcing work performed in association with this work will be paid separately under Work Item series 3.0. Refer to Detail 21.6.0 and 21.6.1 for specific requirements.

©2016, Walker Parking Consultants/Engineers, Inc. All rights reserved.

B. Materials

1. Refer to Section “Unbonded Post-Tensioned Concrete”.

C. Execution

1. Detension any remaining wires in tendons designated for repair.
2. Install center-pull splice coupling onto tendon with required overlap/extension and then stress tendon to specified stress. If this Work Item is performed in combination with other P/T repairs along same tendon, then stress tendon after concrete anchor blocks and patches have achieved the specified compressive strength. Refer to Detail series 21.6 for specific requirements.
3. Epoxy coat coupling assembly and heat shrink wrap coupling and coupling to tendon prior to installation of repair concrete.
4. Grease and wrap new and existing tendons in repair area in accordance with WI 21.2 and is incidental to this work.
5. Refer to WI 21.0 and Section “Unbonded Post-Tensioned Concrete” or additional requirements.

WI 21.7 TENDON SPLICE COUPLING (SINGLE)

A. Scope of Work

1. This work consists of furnishing all labor, materials, equipment, supervision and incidentals necessary to install one tendon splice coupling and a length of new P/T tendon as Detailed. Concrete and mild reinforcing work performed in association with this work will be paid separately under Work Item series 3.0. Refer to Detail 21.7.0 for specific requirements. This work is performed in conjunction with either WI 21.3 or WI 21.6.

B. Materials

1. Refer to Section “Unbonded Post-Tensioned Concrete”.

C. Execution

1. Install new splice coupling assembly onto unstressed existing tendon. Extend the new tendon to the stressing location.
2. Epoxy coat all exposed splice coupling assembly and heat shrink wrap coupling and coupling to tendon prior to installation of repair concrete.
3. Grease and wrap new existing tendon at tendon splice repair area in accordance with WI 21.2 and is incidental to this work.
4. Refer to WI 21.0 and Section “Unbonded Post-Tensioned Concrete” for additional requirements.

©2016, Walker Parking Consultants/Engineers, Inc. All rights reserved.

WI 21.8 P/T TENDON MATERIAL

A. Scope of Work

1. This work consists of furnishing all labor, materials, equipment, supervision and incidentals necessary to provide and install new P/T monostrand tendon as needed in Work Items 21.3, 21.4, 21.6., and 21.7.

B. Materials

1. Refer to Section “Unbonded Post-Tensioned Concrete”.

C. Execution

1. Install new tendon within concrete removal area as needed to replace damaged or defective tendon.
2. Tendon profile shall match existing. Use chairs and tie wire to maintain Tendon position during concrete placement.
3. Refer to WI 21.0 and Section “Unbonded Post-Tensioned Concrete” for additional requirements.

WI 35.0 BRICK/MASONRY REPAIR

WI 35.1 TUCKPOINTING

A. Scope of Work

1. Work consists of furnishing all labor, materials, equipment, supervision and incidentals necessary to tuckpoint defective, cracked, broken or eroded joints in existing brick work, and side vertical joints and top masonry joint where new brick abuts existing. Refer to detail 35.1.0 for specific requirements.

B. Materials

1. Masonry Cement: ASTM C 91.
2. Mortar Cement: U.B.C. Standard No. 21-14.
3. Hydrated Lime: ASTM C 207, Type N.
4. Aggregate for Mortar: ASTM C 144; except for joints less than 0.25 in., use aggregate graded with 100% passing the No. 16 sieve.
5. Water: Portable
6. Mortar shall match existing color.

C. Execution

1. Contractor shall locate and mark all Work areas. Engineer/Architect shall verify locations prior to start of Work.
2. All defective joints which are cracked, broken, or eroded to depth of 0.5 in. or more, and all vertical side joints and top masonry joints where new brick abuts existing shall be tuckpointed.

©2016, Walker Parking Consultants/Engineers, Inc. All rights reserved.

3. Joints to be tuckpointed shall be cut back to depth of 1 in. to 1.25 in., or to full depth of deterioration. Use mechanically operated blades only to perform cutting. Joint at back of cut shall have square shoulder. Remove all mortar from upper and lower surfaces and sides of mortar joint being prepared.
4. Contractor shall flush all mortar joints thoroughly with clean water under pressure prior to tuckpointing to remove all dust, dirt, and laitance. Brick shall be damp and free of excess water before tuckpointing commences. Take all necessary precautions to prevent water from entering cavity space during cleaning operations.
5. Tuckpointing shall be performed using Type N mortar. Match existing mortar color. Mortar shall be dry and mixed thoroughly prior to adding sand. Add one-half required mixing water and allow to stand 1 hour, then add balance of mixing water.
6. Press mortar into prepared joint using pointing tool 0.125 in. smaller than width of joint until joint is packed full. Finish point joint with pointing tool at least 0.125 in. wider than prepared joint.
7. Prior to initial set of mortar, tool joints to match existing.
8. Allow 3 to 7 days for mortar to harden prior to cleaning of brick wall.
9. Dispose of all accumulated material and leave premises in clean condition.
10. Masonry surfaces that become dirty or smeared during joint cutting and repointing of joint surfaces shall be cleaned with bristle brushes and plain water.
11. Unnecessary damage to surrounding brick shall be repaired by Contractor at no cost to Owner.

WI 35.3 MASONRY UNIT REPAIR / REPLACEMENT

A. Scope of Work

1. Work consists of furnishing all labor, materials, equipment, supervision and incidentals necessary for local brick removal and replacement due to fractures, cracks, broken or unsound brick. This work is performed in conjunction with work item “Tuckpointing.” Refer to detail 35.3.0 for further information.

B. Materials

1. Brick shall be re-used if possible. Brick that is not able to be re-used shall be replaced with new brick to match existing materials and color.
2. Mortar shall be as specified in Section "Tuckpointing."

C. Execution

1. Contractor shall locate and mark all brick to be replaced. Engineer shall verify replacement locations prior to start of Work.
2. Contractor shall remove all existing fractured, cracked, spalled, broken or structurally unsound brick and all brick damaged during removal and toothing work.
3. Internal steel exposed during removal process shall be sandblasted to bare metal and primed. Coat with one coat of corrosion resistant paint prior to brick replacement.

©2016, Walker Parking Consultants/Engineers, Inc. All rights reserved.

4. Entire cavity of removed brick shall be thoroughly cleaned of all mortar from top, bottom, and both sides of all brick that abut new brick work. Do not allow mortar droppings to accumulate in cavity space, in weep holes, or on flashing. Engineer shall inspect all cavities for condition prior to commencement of new construction.
5. New brick veneer shall be anchored to backing with flexible metal ties embedded in masonry joints and attached to existing structure. Space veneer anchors at 24 in. o.c. vertically. Horizontal anchor spacing shall not exceed 24 in. o.c. Existing veneer anchors not damaged during brick removal may be reused at Contractor's option. Clean existing anchors prior to replacing brick veneer.
6. Flush cavity thoroughly with water to remove all dust and laitance prior to brick replacement. Take all necessary precautions to prevent water from entering cavity space during cleaning operations. Allow excess water to run off. New brick or existing brick removed from building shall be laid in full bed of mortar while wall is still damp. All brick repair work shall be flush with existing.
7. New brick work is to be toothed into existing brick work.
8. Side vertical joints and top masonry joint shall be tuckpointed as work incidental to this Work Item.
9. Prior to initial set of mortar, tool joints to match existing.
10. Adequate weather protection shall be installed over all areas left open at completion of each day's work.
11. Allow 3 to 7 days for mortar to harden prior to cleaning of brick wall.
12. Dispose of all accumulated material and leave premises in clean condition.
13. Masonry surfaces that become dirty or smeared during joint cutting and repointing of joint surfaces shall be cleaned with bristle brushes and plain water.
14. Unnecessary damage to surrounding brick shall be repaired by Contractor at no cost to Owner.

END OF SECTION 02000

© Copyright 2016. All rights reserved. No part of this document may be reproduced in any form or by any means without permission from Walker Parking Consultants/Engineers, Inc.

SECTION 02010 - GENERAL CONCRETE SURFACE PREPARATION

PART 1 - GENERAL

1.1 DEFINITIONS

A. **DELAMINATIONS**: Fracture planes, "internal cracks," within concrete. Typically these fractures are parallel to the member face and vary in depth.

B. **NEAR-VERTICAL CHIPPED EDGES:** Provide an edge dressed to within 20º of perpendicular of finished surface.

C. **SPALLS:** Potholes, cavities or voids in floor slabs, beams, columns, and walls. Usually result of delamination migrating to face of concrete member. When fracture finally reaches surface, concrete encompassed by delamination breaks away, resulting in spall.

D. **UNSOUND CONCRETE:** Concrete exhibiting one or more of:

1. Incipient fractures present beneath existing delaminated or spalled surfaces.
2. Honeycombing.
3. Friable or punky areas.
4. Deterioration from freeze-thaw action.

E. **SCALING:** Deterioration which attacks mortar fraction (paste) of concrete mix. First appears as minor flaking and disintegration of concrete surface. Scaling eventually progresses deeper into concrete, exposing aggregate which breaks away. Concrete scaling is caused by freeze-thaw action. If concrete is frozen in saturated state, excess water freezing in concrete causes high internal stresses.

F. **SHOTBLASTING:** Scarification of concrete surfaces using an abraded metal shot-rebound. See Corps of Engineer's Manual EM 1110-2-2002 and the National Cooperative Highway Research Program's Report #99 for a more detailed definition.

PART 2 - PRODUCTS (NOT APPLICABLE)

PART 3 - EXECUTION (NOT APPLICABLE)

END OF SECTION 02010

© Copyright 2016. All rights reserved. No part of this document may be reproduced in any form or by any means without permission from Walker Parking Consultants/Engineers, Inc.

SECTION 02030 - SURFACE PREPARATION FOR PATCHING

PART 1 - GENERAL

1.1 RELATED DOCUMENTS

A. Drawings and general provisions of Contract, including General and Supplementary Conditions and Division 1 Specification Sections apply to this Section.

1.2 SUMMARY

A. This Section includes the provision of all labor, materials, equipment, supervision and incidentals necessary to locate and remove all delaminated and unsound concrete and preparation of cavities created by removal to receive patching material and preparation of existing surface spalls and potholes to receive patching material.

B. Related Sections: Following Sections contain requirements that relate to this Section:

1. Division 3 Section "Latex Modified Concrete and Mortar"
2. Division 3 Section "Shotcrete"
3. Division 3 Section "Trowel Applied Mortar"

1.3 REFERENCES

A. "Specifications for Structural Concrete for Buildings" (ACI 301) by American Concrete Institute, herein referred to as ACI 301, is included in total as specification for this structure except as otherwise specified herein.

B. Comply with provisions of following codes, specifications and standards except where more stringent requirements are shown on Drawings or specified herein:

1. "Guide for Repair of Concrete Bridge Superstructures" (ACI 546.1), American Concrete Institute.

PART 2 - PRODUCTS (NOT APPLICABLE)

©2016, Walker Parking Consultants/Engineers, Inc. All rights reserved.

PART 3 - EXECUTION

3.1 INSPECTION

A. Floor Slabs:

1. Floor slab delaminations: locate by sounding surface with hammer, rod, or chain drag.
2. When delaminated area is struck, distinct hollow sound is heard.
3. Contractor: sound all designated floors for delaminations.
4. Certain structural systems that contain thin slab thicknesses with Welded Wire Reinforcement or other small diameter reinforcing, such as waffle slab or precast tees, may have significant deterioration without evidence of delaminations. These structural systems require qualified personnel to provide additional inspections, primarily visual in nature, to define the extent of deterioration.
5. Contractor: Visually inspect thin slab thicknesses with small diameter reinforcing for deterioration.

B. Vertical and Overhead Surfaces:

1. Vertical and overhead surface delaminations: locate by sounding appropriate member with hammer or rod.
2. Cracks, usually horizontal in orientation along beam faces, and vertical in orientation near column corners are indicators of delaminated concrete.
3. Contractor: sound only vertical and overhead surfaces that show evidence of cracking and/or salt and water staining.

C. Delaminated areas, once located by Contractor, shall be further sounded to define limits. Mark limits with chalk or paint.

D. Contractor: locate spalls by visual inspection and mark boundaries with chalk or paint after sounding surface.

E. Engineer/Architect will define and mark additional unsound concrete areas for removal, if required.

F. Areas to be removed shall be as straight and rectangular as practical to encompass repair and provide neat patch.

G. Contractor: Locate and determine depth of all embedded REINFORCEMENT, POST-TENSIONING TENDONS, and ELECTRICAL CONDUIT in repair area and mark these locations for reference during concrete removal. Do NOT nick or cut any embeds unless approved by Engineer/Architect.

3.2 PREPARATION

A. Temporary shoring may be required at concrete floor repair areas exceeding 5 sq ft and at any beam, joist, or column repair. Contractor: Review all marked removal and preparation areas and request clarification by Engineer/Architect of shoring

©2016, Walker Parking Consultants/Engineers, Inc. All rights reserved.

requirements in questionable areas. Shores shall be in place prior to concrete removal and cavity preparation in any area requiring shores.

B. Delaminated, spalled and unsound concrete floor areas: mark boundaries. All concrete shall be removed from within marked boundary to minimum depth of 0.75 in. using 15 to 30 lb chipping hammers equipped with chisel point bits. When directed by Engineer/Architect, chipping hammers less than 15 lb shall be used to minimize damage to sound concrete. If delaminations exist beyond minimum removal depth, chipping shall continue until all unsound and delaminated concrete has been removed from cavity.

C. Where embedded reinforcement or electrical conduit is exposed by concrete removal, exercise extra caution to avoid damaging it during removal of unsound concrete. If bond between exposed embedded reinforcement and adjacent concrete is impaired by Contractor's removal operations, Contractor shall perform additional removal around and beyond perimeter of reinforcement for minimum of 0.75 in. along entire length affected at no cost to Owner.

D. If rust is present on embedded reinforcement where it enters sound concrete, additional removal of concrete along and beneath reinforcement required. Additional removal shall continue until non-rusted reinforcement is exposed, or may be terminated as Engineer/Architect directs.

E. Sawcut to depth of 0.75 in. into floor slab, unless otherwise noted. For vertical and overhead surfaces marked boundary may be sawcut, ground or chipped to depth of 0.5 in. to 0.625 in. into existing concrete, measured from original surface. All edges shall be straight and patch areas square or rectangular-shaped. Diamond blade saw or grinder with abrasive disk suitable for cutting concrete is acceptable for performing work. Edge cut at delamination boundary shall be dressed perpendicular to member face. It shall also be of uniform depth, for entire length of cut. Exercise extra caution during sawcutting to avoid damaging existing reinforcement (ESPECIALLY POST-TENSIONING TENDONS AND SHEATHING) and electrical conduit and any other embedded items near surface of concrete. Any damage to existing reinforcement, post-tensioning tendons or sheathing during removals shall be repaired by Contractor with Engineer/Architect-approved methods at no additional cost to Owner.

3.3 INSPECTION OF REPAIR PREPARATION

A. After removals are complete, but prior to final cleaning, cavity and exposed reinforcement shall be inspected by Contractor and verified by Engineer/Architect for compliance with requirements of this Section. Where Engineer/Architect finds unsatisfactory cavity preparation, Engineer/Architect shall direct Contractor to perform additional removals. Engineer/Architect shall verify areas after additional removals.

B. Contractor shall inspect embedded reinforcement and conduits exposed within cavity for defects due to corrosion or damage resulting from removal operations. Contractor shall notify Engineer/Architect of all defective and damaged reinforcement or conduits.

©2016, Walker Parking Consultants/Engineers, Inc. All rights reserved.

Replacement of damaged or defective reinforcement or conduits shall be performed according to this Section and as directed by Engineer/Architect.

3.4 REINFORCEMENT AND EMBEDDED MATERIALS IN REPAIR AREAS

A. All embedded reinforcement exposed during surface preparation that has lost more than 25% (15% if 2 or more consecutive parallel bars and/or tendons are affected) of original cross-section due to corrosion shall be considered DEFECTIVE. All non-defective exposed reinforcement that has lost section to extent specified above as direct result of Contractor's removal operations shall be considered DAMAGED.

B. Embedded materials including, but not limited to, electrical conduit, corrosion protection systems and snow/ice melting equipment shall be protected by Contractor during removal operations. Damage due to removal operations shall be repaired by Contractor in accordance with national code requirements at no cost to Owner. Embedded materials which are defective due to pre-existing conditions may be repaired or replaced by Contractor or abandoned at Owner's option and cost.

C. Supplement defective or damaged embedded reinforcement by addition of reinforcement of equal diameter with Class "B" minimum splice per ACI 318 beyond damaged portion of reinforcement. Secure new reinforcement to existing reinforcement with wire ties and/or approved anchors. Supplemental reinforcement shall be ASTM A615 Grade 60 steel installed in accordance with Section "Cast-in-Place Concrete." Tendon supplement or repair materials, when applicable, shall be as required by Section "Work Items."

D. Loose and supplemental reinforcement exposed during surface preparation shall be securely anchored prior to patch placement. Loose reinforcement shall be adequately secured by wire ties to bonded reinforcement or shall have drilled-in anchors installed to original concrete substrate. Drilled-in anchors shall be Powers “Tie-Wire Lok-Bolt” anchors, ITW Ramset/Red Head “TW-1400” anchor, or approved equivalent. Supplemental reinforcing needed to be held off substrate shall be adequately secured by drilled-in anchors installed to original concrete substrate with Powers “Tie-Wire Spike”, ITW Ramset/Red Head Redi-Drive “TD4-112” anchors, or approved equivalent. Engineer/Architect will determine adequacy of wire ties and approve other anchoring devices prior to their use. Securing loose and supplemental reinforcement is incidental to surface preparation and no extras will be allowed for this Work.

E. Concrete shall be removed to provide minimum of 3/4 in. clearance on all sides of defective or damaged exposed embedded reinforcement that is left in place. Minimum of 1.5-in. concrete cover shall be provided over all new and existing reinforcement. Concrete cover over reinforcement may be reduced to 1 in. with Engineer/Architect's approval if coated with an approved epoxy resin.

F. Supplemental reinforcement and concrete removals required for repairs of defective or damaged reinforcement shall be paid for as follows:

1. Concrete removals and supplemental reinforcement required for repairs of DEFECTIVE reinforcement shall be paid for by Owner at unit price bid.

©2016, Walker Parking Consultants/Engineers, Inc. All rights reserved.

2. Concrete removals and supplemental reinforcement required for repairs of DAMAGED reinforcement shall be paid for by Contractor.

3.5 CLEANING OF REINFORCEMENT WITH DELAMINATION AND SPALL CAVITIES

A. All exposed steel shall be cleaned of rust to bare metal by sandblasting. Cleaning shall be completed immediately before patch placement to insure that base metal is not exposed to elements and further rusting for extended periods of time. Engineer/Architect may require entire bar diameter be cleaned.

B. After all sandblasting operations and cleanup are completed, paint all exposed steel with an approved epoxy. Protect prepared surfaces from damage prior to and during patch placement.

3.6 PREPARATION OF CAVITY FOR PATCH PLACEMENT

A. Cavities will be examined prior to commencement of patching operations. Sounding surface shall be part of examination. Any delamination noted during sounding shall be removed as specified in this Section.

B. Cavities shall be sandblasted. Airblasting is required as final step to remove sand. All debris shall be removed from site prior to commencement of patching.

END OF SECTION 02030

© Copyright 2016. All rights reserved. No part of this document may be reproduced in any form or by any means without permission from Walker Parking Consultants/Engineers, Inc.

SECTION 03371 - SHOTCRETE

PART 1 - GENERAL

1.1 RELATED DOCUMENTS

A. Drawings and general provisions of the Contract, including General and Supplementary Conditions and Division 1 Specification Sections, apply to this Section.

1.2 SUMMARY

A. This Section includes shotcrete applied by the dry mix process.

1.3 DEFINITIONS

A. Shotcrete: Mortar or concrete pneumatically projected onto a surface at high velocity.

B. Dry-Mix Shotcrete: Shotcrete with most of the water added at nozzle.

C. Wet-Mix Shotcrete: Shotcrete with ingredients, including mixing water, mixed before introduction into delivery hose.

1.4 SUBMITTALS

A. Product Data: For manufactured materials and products including reinforcement and forming accessories, shotcrete materials, admixtures, and curing compounds.

B. Shop Drawings: For details of fabricating, bending, and placing reinforcement. Include support and anchor details, number and location of splices, and special reinforcement required for openings through shotcrete structures.

C. Samples: Approximately 24 by 24 by 2 inches (600 by 600 by 50 mm), to illustrate quality of finishes, colors, and textures of exposed surfaces of shotcrete.

D. Design Mixes: For each shotcrete mix.

E. Material Test Reports: For shotcrete materials.

F. Material Certificates: For each material item, signed by manufacturers.

1.5 QUALITY ASSURANCE

A. Installer Qualifications: A qualified installer employing nozzle operators who attain mean core grades not exceeding 2.5, according to ACI 506.2, on preconstruction tests.

©2016, Walker Parking Consultants/Engineer, Inc. All rights reserved.

B. Testing Agency Qualifications: Independent and qualified according to ASTM C 1077 and ASTM E 329 for testing indicated, as documented according to ASTM E 548.

C. Comply with provisions of the following, unless more stringent requirements are indicated:

1. ACI 301, "Specification for Structural Concrete."
2. ACI 506.2, "Specification for Shotcrete."
3. CRSI's "Manual of Standard Practice."

D. Preconstruction Testing Service: Owner will engage a qualified independent testing agency to perform preconstruction testing and inspections indicated below:

1. Produce test panels before shotcrete placement according to requirements in ACI 506.2 and ASTM C 1140 for each design mix, shooting orientation, and nozzle operator. Produce test panels with dimensions of 24 by 24 inches (600 by 600 mm) minimum and of average thickness of shotcrete, but not less than 3-1/2 inches (90 mm). From each test panel, testing agency will obtain six test specimens: one set of three specimens unreinforced and one set of three specimens reinforced. Agency will perform the following:

a. Test each set of unreinforced specimens for compressive strength according to ASTM C 42.
b. Visually inspect each set of reinforced shotcrete cores taken from test panels and determine mean core grades according to ACI 506.2.

E. Mockups: Before installing shotcrete, construct mockups for each finish required and for each design mix, shooting orientation, and nozzle operator to demonstrate aesthetic effects and set quality standard for installation.

F. Preinstallation Conference: Conduct conference at Project site to comply with requirements in Division 1 Section "Project Management and Coordination."

1.6 PROJECT CONDITIONS

A. Cold-Weather Shotcreting: Protect shotcrete work from physical damage or reduced strength caused by frost, freezing, or low temperatures according to ACI 306.1 and as follows:

1. Discontinue shotcreting when ambient temperature is 40 deg F (4.4 deg C) and falling. Uniformly heat water and aggregates before mixing to obtain a shotcrete shooting temperature of not less than 50 deg F (10 deg C) and not more than 90 deg F (32 deg C).
2. Do not use frozen materials or materials containing ice or snow.
3. Do not place shotcrete on frozen surfaces or surfaces containing frozen materials.
4. Do not use calcium chloride, salt, and other materials containing antifreeze agents.

©2016, Walker Parking Consultants/Engineer, Inc. All rights reserved.

B. Hot-Weather Shotcreting: Mix, place, and protect shotcrete according to ACI 305R when hot-weather conditions and high temperatures would seriously impair quality and strength of shotcrete, and as follows:

1. Cool ingredients before mixing to maintain shotcrete temperature at time of placement below 100 deg F (38 deg C) for dry mix.
2. Decrease temperature of reinforcing steel and receiving surfaces below 100 deg F (38 deg C) before shotcreting.

PART 2 - PRODUCTS

2.1 FORM MATERIALS

A. Forms: Form-facing panels that will provide continuous, straight, smooth, concrete surfaces. Furnish panels in largest practicable sizes to minimize number of joints.

2.2 REINFORCING MATERIALS

A. Reinforcing Bars: ASTM A 615/A 615M, Grade 60 (Grade 420), deformed.

B. Low-Alloy-Steel Reinforcing Bars: ASTM A 706/A 706M, deformed.

C. Galvanized Reinforcing Bars: ASTM A 767/A 767M, Class II zinc coated, hot-dip galvanized after fabrication and bending, as follows:

1. Steel Reinforcement: ASTM A 615/A 615M**,** Grade 60, deformed.

D. Plain-Steel Wire: ASTM A 82, galvanized.

E. Plain-Steel-Welded Wire Reinforcement: ASTM A 185, fabricated from galvanized steel wire into flat sheets.

F. Deformed-Steel-Welded Wire Reinforcement: ASTM A 497, flat sheet.

G. Supports: Bolsters, chairs, spacers, ties, and other devices for spacing, supporting, and fastening reinforcing steel in place according to CRSI's "Manual of Standard Practice" and as follows:

1. For uncoated reinforcement, use CRSI Class 1, plastic-protected bar supports.
2. For zinc-coated reinforcement, use galvanized wire or dielectric-polymer-coated wire bar supports.

H. Reinforcing Anchors: ASTM A 36/A 36M, unheaded rods or ASTM A 307, Grade A (ASTM F 568, Property Class 4.6), hex-head bolts; carbon steel; and carbon-steel nuts.

1. Finish: Hot-dip zinc coating, ASTM A 153/A 153M, Class C.

©2016, Walker Parking Consultants/Engineer, Inc. All rights reserved.

2.3 SHOTCRETE MATERIALS

A. “MS-D1 Shotcrete” by King Packaged Materials Company. Phone: 800.461.0566.

2.4 CURING MATERIALS

A. Absorptive Cover: AASHTO M 182, Class 2, burlap cloth made from jute or kenaf, weighing approximately 9 oz./sq. yd. (305 g/sq. m) dry.

B. Moisture-Retaining Cover: ASTM C 171, polyethylene film or white burlap-polyethylene sheet.

C. Water: Potable.

D. Clear, Waterborne, Membrane-Forming Curing Compound: ASTM C 309, Type 1, Class B.

2.5 SHOTCRETE EQUIPMENT

A. Mixing Equipment: Capable of thoroughly mixing shotcrete materials in sufficient quantities to maintain continuous placement.

B. Dry-Mix Delivery Equipment: Capable of discharging aggregate-cement mixture into delivery hose under close control and maintaining continuous stream of uniformly mixed materials at required velocity to discharge nozzle. Equip discharge nozzle with manually operated water-injection system for directing even distribution of water to aggregate-cement mixture.

1. Provide uniform, steady supply of clean, compressed air to maintain constant nozzle velocity while simultaneously operating blow pipe for cleaning away rebound.
2. Provide water supply with uniform pressure at discharge nozzle to ensure uniform mixing with aggregate-cement mix. Provide water pump to system if line water pressure is inadequate.

C. Wet-Mix Delivery Equipment: Capable of discharging aggregate-cement-water mixture accurately, uniformly, and continuously.

2.6 BATCHING AND MIXING

A. Dry-Mix Process: Measure mix proportions by weight batching according to ASTM C 94 or by volume batching complying with ASTM C 685 requirements.

1. In volume batching, adjust fine-aggregate volume for bulking. Test fine-aggregate moisture content at least once daily to determine extent of bulking.
2. Prepackaged shotcrete materials may be used at Contractor's option. Predampen prepackaged shotcrete materials and mix before use.

©2016, Walker Parking Consultants/Engineer, Inc. All rights reserved.

B. Wet-Mix Process: Measure, batch, mix, and deliver shotcrete according to ASTM C 94 and furnish batch ticket information.

1. Comply with ASTM C 685 when shotcrete ingredients are delivered dry and proportioned and mixed on-site.

PART 3 - EXECUTION

3.1 PREPARATION

A. Concrete or Masonry: Before applying shotcrete, remove unsound or loose materials and contaminants that may inhibit shotcrete bonding. Chip or scarify areas to be repaired to extent necessary to provide sound substrate. Cut edges square and 1/2 inch (13 mm) deep at perimeter of work, tapering remaining shoulder at 1:1 slope into cavity to eliminate square shoulders. Dampen surfaces before shotcreting.

1. Abrasive blast or hydroblast existing surfaces that do not require chipping to remove paint, oil, grease, or other contaminants and to provide roughened surface for proper shotcrete bonding.

3.2 FORMS

A. General: Design, erect, support, brace, and maintain forms, according to ACI 301, to support shotcrete and construction loads and to facilitate shotcreting. Construct forms so shotcrete members and structures are secured to prevent excessive vibration or deflection during shotcreting.

1. Fabricate forms to be readily removable without impact, shock, or damage to shotcrete surfaces and adjacent materials.
2. Construct forms to required sizes, shapes, lines, and dimensions using ground wires and depth gages to obtain accurate alignment, location, and grades in finished structures. Construct forms to prevent mortar leakage but permit escape of air and rebound during shotcreting. Provide for openings, offsets, blocking, screeds, anchorages, inserts, and other features required in the Work.

B. Form openings, chases, recesses, bulkheads, keyways, and screeds in formwork. Determine sizes and locations from trades providing such items. Accurately place and securely support items built into forms.

3.3 STEEL REINFORCEMENT

A. General: Comply with CRSI's "Manual of Standard Practice" for fabricating, placing, and supporting reinforcement.

B. Clean reinforcement of loose rust and mill scale, earth, ice, and other materials that weaken shotcrete bonding.

©2016, Walker Parking Consultants/Engineer, Inc. All rights reserved.

C. Securely embed reinforcing anchors into existing substrates, located as required.

D. Accurately position, support, and rigidly secure reinforcement against displacement by formwork, construction, or shotcreting. Locate and support reinforcement by metal chairs, runners, bolsters, spacers, and hangers, as required.

E. Place reinforcement to obtain minimum coverages for shotcrete protection. Arrange, space, and securely tie bars and bar supports to hold reinforcement in position during shotcreting. Set wire ties with ends directed into shotcrete, not toward exposed shotcrete surfaces.

F. Install welded wire reinforcement in lengths as long as practicable. Lap adjoining pieces at least one full mesh and lace splices with wire. Offset laps of adjoining widths to prevent continuous laps in either direction.

3.4 APPLICATION

A. Apply temporary protective coverings and protect adjacent surfaces against deposit of rebound and overspray or impact from nozzle stream.

B. Moisten wood forms immediately before placing shotcrete where form coatings are not used.

C. Apply shotcrete according to ACI 506.2.

D. Apply dry-mix shotcrete materials within 45 minutes after predampening and wet-mix shotcrete materials within 90 minutes after batching.

E. Deposit shotcrete continuously in multiple passes, to required thickness, without cold joints and laminations developing. Place shotcrete with nozzle held perpendicular to receiving surface. Begin shotcreting in corners and recesses.

1. Remove and dispose of rebound and overspray materials during shotcreting to maintain clean surfaces and to prevent rebound entrapment.

F. Maintain reinforcement in position during shotcreting. Place shotcrete to completely encase reinforcement and other embedded items. Maintain steel reinforcement free of overspray and prevent build-up against front face during shotcreting.

G. Do not place subsequent lifts until previous lift of shotcrete is capable of supporting new shotcrete.

H. Do not permit shotcrete to sag, slough, or dislodge.

I. Remove hardened overspray, rebound, and laitance from shotcrete surfaces to receive additional layers of shotcrete; dampen surfaces before shotcreting.

J. Do not disturb shotcrete surfaces before beginning finishing operations.

K. Remove ground wires or other alignment control devices after shotcrete placement.

©2016, Walker Parking Consultants/Engineer, Inc. All rights reserved.

L. Shotcrete Core Grade: Apply shotcrete to achieve mean core grades not exceeding 2.5 according to ACI 506.2, with no single core grade exceeding 3.0.

M. Installation Tolerances: Place shotcrete without exceeding installation tolerances permitted by ACI 117R, increased by a factor of 2.

3.5 SURFACE FINISHES

A. Gun Finish: Textured, uneven, natural finish to exposed surfaces, unless otherwise indicated.

B. Rod Finish: Rough-textured finish obtained by cutting or screeding exposed face of shotcrete to required plane by rod or straightedge after initial set.

C. Broom Finish: Rough-textured finish obtained by screeding exposed face of shotcrete to required plane by rod, cutting screed, or trowel, and brooming after initial set.

D. Flash Coat: After screeding to natural rod finish, apply up to 1/4-inch (6-mm) coat of shotcrete using ACI 506R, No. 1 gradation, fine-screened sand modified with maximum aggregate size not exceeding No. 4 (4.75-mm) sieve and apply steel-trowel, smooth, hard finish.

3.6 CURING

A. Protect freshly placed shotcrete from premature drying and excessive cold or hot temperatures.

B. Start initial curing as soon as free water has disappeared from shotcrete surface after placing and finishing.

C. Curing Exposed Surfaces: Cure shotcrete by the following methods:

1. Moisture Curing: Keep surfaces continuously moist for at least seven days with water, continuous water-fog spray, water-saturated absorptive covers, or moisture-retaining covers. Lap and seal sides and ends of covers.
2. Curing Compound: Apply curing compound uniformly in continuous operation by power spray according to manufacturer's written instructions. Recoat areas subjected to heavy rainfall within three hours after initial application. Maintain continuity of coating and repair damage during curing period.

    a. Apply curing compound to natural- or gun-finished shotcrete at rate of 1 gal./100 sq. ft. (1 L/2.5 sq. m).

D. Curing Formed Surfaces: Cure formed shotcrete surfaces by moist curing with forms in place for full curing period or until forms are removed. If forms are removed, continue curing by methods specified above, as applicable.

©2016, Walker Parking Consultants/Engineer, Inc. All rights reserved.

3.7 FORM REMOVAL

A. Forms not supporting weight of shotcrete may be removed after curing at not less than 50 deg F (10 deg C) for 24 consecutive hours after gunning, provided shotcrete is hard enough not to be damaged by form-removal operations and provided curing and protecting operations are maintained.

1. Leave forms supporting weight of shotcrete in place until shotcrete has attained design compressive strength. Determine compressive strength of in-place shotcrete by testing representative field-cured specimens of shotcrete.
2. Remove forms only if shores have been arranged to permit removal of forms without loosening or disturbing shores.

B. Clean and repair surfaces of forms to be reused in the Work. Split, frayed, delaminated, or otherwise damaged form-facing materials are unacceptable for exposed surfaces. Apply new form-coating compound as specified for new formwork.

3.8 FIELD QUALITY CONTROL

A. Owner will engage a qualified independent testing agency to sample materials, visually grade cores, perform tests, and submit reports during shotcreting.

B. Air Content: ASTM C 173, volumetric method or ASTM C 231, pressure method; 1 test for each compressive-strength test for each mix of air-entrained, wet-mix shotcrete measured before pumping.

C. Shotcrete Temperature: ASTM C 1064; 1 test hourly when air temperature is 40 deg F (4.4 deg C) and below and when 80 deg F (27 deg C) and above, and 1 test for each set of compressive-strength specimens.

D. Test Panels: Make a test panel, reinforced as in structure, for each shotcrete mix and for each workday or for every 50 cu. yd. (38 cu. m) of shotcrete placed, whichever is less. Produce test panels with dimensions of 24 by 24 inches (600 by 600 mm) minimum and of average thickness of shotcrete, but not less than 4-1/2 inches (115 mm). From each test panel, testing agency will obtain six test specimens: one set of three specimens unreinforced and one set of three specimens reinforced.

1. Test each set of unreinforced specimens for compressive strength according to ASTM C 1140 and construction testing requirements in ACI 506.2.
2. Visually inspect each set of reinforced shotcrete cores taken from test panels and determine mean core grades according to ACI 506.2.

E. In-Place Shotcrete: Take a set of 3 unreinforced cores for each mix and for each workday or for every 50 cu. yd. (38 cu. m) of shotcrete placed, whichever is less. Test cores for compressive strength according to ACI 506.2 and ASTM C 42. Do not cut steel reinforcement.

F. Strength of shotcrete will be considered satisfactory when mean compressive strength of each set of 3 unreinforced cores equals or exceeds 85 percent of specified

©2016, Walker Parking Consultants/Engineer, Inc. All rights reserved.

compressive strength, with no individual core less than 75 percent of specified compressive strength.

1. Mean compressive strength of each set of 3 unreinforced cubes shall equal or exceed design compressive strength with no individual cube less than 88 percent of specified compressive strength.

3.9 REPAIRS

A. Remove and replace shotcrete that is delaminated or exhibits laminations, voids, or sand/rock pockets exceeding limits for specified core grade of shotcrete.

1. Remove unsound or loose materials and contaminants that may inhibit bond of shotcrete repairs. Chip or scarify areas to be repaired to extent necessary to provide sound substrate. Cut edges square and 1/2 inch (13 mm) deep at perimeter of work, tapering remaining shoulder at 1:1 slope into cavity to eliminate square shoulders. Dampen surfaces and apply new shotcrete.

B. Repair core holes from in-place testing according to repair provisions in ACI 301 and match adjacent finish, texture, and color.

3.10 CLEANING

A. Remove and dispose of rebound and overspray materials from final shotcrete surfaces and areas not intended for shotcrete placement. Paint patch and adjacent over spray to match existing.

END OF SECTION 03371

© Copyright 2016. All rights reserved. No part of this document may be reproduced in any form or by any means without permission from Walker Parking Consultants/Engineer, Inc.

SECTION 03381 - UNBONDED POST-TENSIONED CONCRETE

PART 1 - GENERAL

1.1 RELATED DOCUMENTS

A. Drawings and general provisions of Contract, including General and Supplementary Conditions and Division 1 Specification Sections apply to this Section.

1.2 SUMMARY

A. In accordance with Contract Documents, provide all materials, labor, equipment, and supervision to fabricate and install all post-tensioning Work.

1.3 POST-TENSIONING SUPPLIER PREQUALIFICATION REQUIREMENTS

A. Supplier shall have successfully provided all materials for at least 5 post-tensioning installations in parking structures with structural system similar to Project in previous 5 years.

B. Provide post-tensioning strand systems produced in PTI-certified plant conforming to all material and installation requirements of ACI 301, ACI 318, ACI 423.6 and approved by International Code Council (ICC).

C. Compliance with ACI 301 Prestressed Concrete Section, heading “Quality Assurance” required.

D. Prequalified Suppliers are Limited to:

1. Amsysco, Inc., Addison, IL.
2. D. R. Parks & Associates, Rochester, NY.
3. Dywidag Systems International, USA, Inc., Arlington, TX, Bolingbrook, IL, Long Beach, CA, Tucker, GA.
4. International Post Tension, Inc., Leander, TX.
5. Lang Tendons, Toughkenamon, PA.
6. Suncoast Post-Tension, USA, Corporate Office Houston, TX.
7. VSL (Vstructural LLC) Baltimore, MD.

1.4 POST-TENSIONING INSTALLER PREQUALIFICATION REQUIREMENTS

A. Installer shall be accepted in writing by post-tensioning Supplier.

B. Installer shall have successfully performed at least 5 previous post-tensioning installations per heading “Post-Tensioning Supplier Prequalification”.

©2016, Walker Parking Consultants/Engineers, Inc. All rights reserved.

C. All post-tensioning Work shall be under immediate control of person experienced in this Work. Exercise close check and rigid control of all operations as necessary for full compliance with all requirements. Installer's superintendent assigned to Project shall have supervised 5 prior projects of similar magnitude and design, shall be present during all placing and post-tensioning operations and shall exercise close check and control of all operations as required for full conformance to requirements. Superintendent shall be acceptable to Engineer. Superintendent's failure to ensure full compliance with Specification will result in removal from Project.

D. All workers performing installation shall be PTI Certified prior to starting work on Project.

1.5 QUALITY ASSURANCE

A. Work shall conform to requirements of ACI 301, ACI 318, and CRSI MSP-2 except where more stringent requirements are shown on Drawings or specified in this Section.

B. Allow inspection of nonprestressed reinforcement and post-tensioning reinforcement by Engineer:

1.6 SUBMITTALS

A. Make submittals in accordance with requirements of Division 1 and as specified in this Section.

B. Because Work of "Concrete Reinforcement" and "Unbonded Post-Tensioned Concrete" are interdependent, Contractor shall review both Sections, potential interferences, and inform Engineer of potential interferences.

C. Installation Drawings: Include:

1. Type, material, density, and thickness of post-tensioning sheathing.
2. Type and chemical analysis of corrosion preventive coating.
3. Type, material, and thickness of post-tensioning sheathing repair tape.
4. Detailing of anchorage devices.
5. Other incidental features.
6. Superintendent qualifications.

D. Submit following information with Installation Drawing submittal:

1. Sealed calculations, prepared by licensed structural engineer in State of Minnesota, of losses due to anchorage seating, elastic shortening, creep, shrinkage, relaxation, friction, and wobble, used to determine tendon sizes and number. Friction and wobble coefficients shall be in accordance with PTI recommended values unless test data submitted to substantiate lower values.
2. Contractor to extract non corroded section of existing post-tensioning tendon, submit to testing agency to determine and report tensile and yield strength per ASTM A416.
3. Certified calibration curve for each jack.
4. Effective tendon force in multispan pulls shall not be based on average stress for all spans. Consider each span independently.

©2016, Walker Parking Consultants/Engineers, Inc. All rights reserved.

5. Post-tensioning tendon and end anchorage sizes.
6. Sample of concrete anchorage assembly.

E. After review, Installation Drawings and data shall not be changed, nor shall construction operations be revised unless resubmitted for acceptance by Engineer. Engineer's review of details and construction operations does not relieve Contractor of responsibility for completing Work in accordance with Specifications and within Contract Time.

F. Submit following to Engineer for review before beginning construction:

1. Post-tensioning experience record of Installer who is to perform post-tensioning Work.
2. Certified mill test reports for each coil or pack of strand, containing, as a minimum, following test information:

   a. Heat number and identification.
   b. Breaking load.
   c. Load at 1% extension.
   d. Elongation at failure.
   e. Modulus of elasticity.
   f. Diameter and net area of strand.
   g. Type of material: low-or normal relaxation strand.

3. Relaxation losses for low relaxation type material shall conform with ACI 423.6 requirements.
4. Evidence of satisfactory performance on similar projects in United States of America, if strand manufactured outside USA.
5. Results of tests required by ACI 301, Section “Prestressed Concrete,” heading “Quality Assurance.”

G. Contractor will maintain post-tensioning records and submit to Engineer. Report will document:

1. Calculated elongation, based upon actual elastic modulus and cross sectional area of strands used.
2. Actual field elongation measured for each strand.
3. Gage pressure required to achieve required jacking force [per calibration chart] for each strand.
4. Actual gage pressures for each strand.
5. Required concrete strength at time of jacking.
6. Reported concrete cylinder strength before jacking.
7. Range of allowable elongations for jacking force.
8. Jack and gauge identification numbers.

H. Submit copies of actual stressing records to Engineer promptly upon completion of each day of stressing operations.

I. Installer certifies that stressing process and records have been reviewed, and that forces specified have been provided.

J. If it appears that design post-tensioning stresses are not being attained, verification may be ordered by Engineer.

©2016, Walker Parking Consultants/Engineers, Inc. All rights reserved.

K. Do not cut strand ends until Contractor receives Engineer's written review of post-tensioning records.

1.7 REFERENCES

A. Contractor: Keep a copy of PTI “Field Procedures Manual for Unbonded Single Strand Tendons” on site.

B. American Concrete Institute (ACI):

1. ACI 318, "Building Code Requirements for Structural Concrete."
2. ACI 347, "Recommended Practice for Concrete Formwork."
3. ACI 362.1R-97, “Guide for the Design of Durable Parking Structures.”
4. ACI 423.3R, "Recommendations for Concrete Members Prestressed with Unbonded Tendons."
5. ACI 423.6, “Specification for Unbonded Single-Strand Tendons and Commentary.”

C. American Society for Testing and Materials (ASTM):

1. ASTM A416, "Specification for Uncoated Seven-Wire Strand for Prestressed Concrete."
2. ASTM E328, "Recommended Practice for Stress-Relaxation Tests for Materials and Structures."

D. Concrete Reinforcing Steel Institute (CRSI):

1. CRSI MSP-2, "Manual of Standard Practice."

E. Post-Tensioning Institute (PTI):

1. PTI, "Specification for Unbonded Single Strand Tendons."
2. PTI, "Field Procedures Manual for Unbonded Single Strand Tendons."

F. International Code Council (ICC):

1. ICC, "International Building Code."

1.8 DELIVERY, STORAGE AND HANDLING

A. Supplier: All post-tensioning tendons within same concrete placement shall have same heat number and be identified accordingly.

B. Supplier: Package each tendon bundle at source in heavy plastic, sealed shut, to prevent physical damage to tendon during transportation and storage and to positively protect strand. Use heavy padding to protect sheathing and tendon from physical damage during transportation and storage and from being cut by binding materials. Use filament tape, not wire binding. Cardboard unacceptable. No part of any tendon shall ever be unprotected against moisture. Corrosion inhibitor coated bare strand unacceptable. Tendon damage during shipping shall be fabricator responsibility. Tendon damage during storage shall be general contractor responsibility.

©2016, Walker Parking Consultants/Engineers, Inc. All rights reserved.

C. Contractor/Installer: Inspect all tendons before unloading. Store per ACI 423.6.

D. Plastic on stressing tendon tail to be removed only on day of stressing. Use special cutting tool or approval equal to remove sheathing.

E. Contractor/Installer: Do not store material on slabs to be prestressed before final prestress of slabs is accomplished. At no time shall weight of stored material placed on slab area, after prestressing is completed and concrete has reached specified 28 day strength, exceed total design load of that slab area. Between time final post-tensioning is accomplished and time concrete has reached specified 28 day strength, weight of stored material placed on slab area shall not exceed half total design load of that slab area.

PART 2 - PRODUCTS

2.1 POST-TENSIONING MATERIALS

A. Post-tensioning tendons, ASTM A416: Seven-wire, uncoated low relaxation steel strand, Grade 270 with minimum ultimate strength of 270,000 psi, unbonded system. All strand shall be manufactured by single source. If manufactured outside United States of America, strand shall be subject to Engineer's acceptance. Acceptance will be based on Engineer's review of evidence of satisfactory performance of strand in United States of America over past 5 years.

B. Sheathing shall conform to ACI 423.6 requirements and demonstrate following properties:

1. Sufficient strength to withstand unrepairable damage during fabrication, transport, installation, concrete placement and tensioning.
2. Water tightness over entire sheathing length.
3. Chemical stability, without embrittlement or softening over anticipated exposure temperature range and service life of structure.
4. Non-reactive with concrete, steel, and tendon corrosion preventive coating.
5. Color shall contrast with color of corrosion preventive coating so that sheathing tears will be readily visible. Black/dark colored sheathing is unacceptable.
6. Sheathing: seamless and extruded high density polypropylene or seamless and extruded high density polyethylene. Specific gravity $\geq$ 0.95.
7. Sheathing thickness: min. 50 mil thickness –0 +15 mils
8. Inside diameter: at least 0.030 in. greater than maximum diameter of strand.
9. Make all connections and components watertight.

C. Tape:

1. “3M Tape No. 226,” 3M, St. Paul, MN.
2. “Patch #145 Vinyl – Rubber Adhesive,” 3M, St. Paul, MN.
3. “Polyken, Type 826,” Kendall Co., Boston, MA.
4. “PWT-20, Alltape,” Hialeah, FL.

D. Repair Material for Sheathing

1. For nicks or cuts less 0.25 in. long: “Scotch-Weld DP-8005,” by 3M.

©2016, Walker Parking Consultants/Engineers, Inc. All rights reserved.

E. Tendon corrosion inhibiting coating shall conform to ACI 423.6 requirements.

1. Acceptable corrosion inhibiting coatings:

a. "Shell PT Grease," Shell Oil Company, West Orange, NJ.
b. "Visconorust PT 1001," Viscosity Oil, Willowbrook, IL.
c. "Mobil Greasrex K218," Mobil Oil Company, Houston, TX.
d. "Unocal PT1 Cable Grease," Unocal Corporation, Schaumburg, IL.
e. “Century PT,” Fuchs Lubricants Company, Marion, IL.
f. “Royal PT-1 & PT-2 Corrosion Inhibiting Grease,” Troco Oil Company, Tulsa, OK.

2. Corrosion inhibiting coating shall completely fill void between tendon and sheathing.
3. Minimum weight of corrosion inhibiting coating on tendon strand shall conform to ACI 423.6 requirements.

F. Couplers: In accordance with ACI 301 “Prestressed Concrete”, heading “Couplers” where indicated on Drawings or specified by Engineer. Completely fill coupler enclosure with corrosion inhibiting coating.

G. Heat Shrink Wrap: All couplers and stressing couplers shall be encapsulated with heat shrink wrap. Encapsulate center-pull tendon splice coupling and coupler with properly sized “3M FP-301 Heat Shrink Tubing.” Extend heat shrink tubing onto tendon sheathing.

H. Anchorages: In accordance with ACI 301 Section “Prestressed Concrete”, heading “Anchorages for unbonded tendons”: design slab and beam anchors for transfer at 3,500 psi concrete strength; size bearing plates in accordance with ACI 301 unless certified test reports are submitted proving acceptable deviation. Anchor wedge cavity opening shall be at least 0.690 in. to permit passage of coated strand without damaging sheathing. Mechanical reaming of anchor wedge cavity orifice prohibited. Anchorage system shall meet all requirements below and those of PTI Guide Specifications for aggressive environments. All anchorage systems shall be accepted at least 14 days before Bid date. All anchor plates shall be plastic coated.

I. Tendon anchorages and couplings shall be designed to develop strand strength specified in ASTM A416. Castings shall be nonporous and free of sand, blow holes, voids, and other defects. Provision shall be made for plastic cap which fits tightly and seals barrel end on stressing side of anchor. Bearing side of anchor casting shall have provision for plastic sleeve which shall prevent moisture leaks into anchor casting or tendon sheathing. For wedge type anchorages, wedge grippers shall be designed to preclude premature failure of prestressing steel due to notch or pinching effects under static and dynamic test load conditions stipulated under paragraph (a), for low relaxation prestressing steel materials.

J. Tendon anchor plates and wedges shall be same as those which passed static and dynamic test in accordance with most stringent of manufacturers recommendations, PTI Guide Specifications, or ICC.

K. Stressing pockets and anchorage recesses: Use plastic pocket former at stressing end to provide 2 in. minimum recess to anchor casting and 3 in. minimum width to allow access to cut off excess strand. At intermediate anchorages, use permanent sleeve to prevent moisture leaks into anchor casting or tendon sheathing.

©2016, Walker Parking Consultants/Engineers, Inc. All rights reserved.

L. Anchor Cap:

1. Stressing End: Plastic cap shall be clear and fit tightly, covering stressing end of wedge cavity and wedges, and shall be fitted with sealing device.
2. Intermediate Anchorages: Plastic cap similar to above shall be used with exception that cap shall be open to allow passage of strand with minimum 0.75 in. chimney extension of cap.
3. Coating Material: Wedge area and plastic cap shall be completely filled with same corrosion preventive coating used along length of strand.
4. Plastic cap shall have positive mechanical connection to anchor. Friction fit is not acceptable.

M. Sleeve (trumpet): Plastic sleeve shall be used on bearing side of anchor casting which will prevent moisture leaks into anchor casting or tendon sheathing. Plastic sleeve shall be minimum 10 in. long. Fill sleeve completely with corrosion inhibiting coating. Sleeve shall be translucent to permit verification of full. If sheathing is not cut and stripped until after concrete is cast, sleeve shall provide sufficient overlap. Sleeve shall have a positive mechanical connection to bearing side of anchor able to resist a pulling force of 100 lbs minimum.

N. Intermediate Anchorage Sheathing: At intermediate stressing anchorages, exposed stressing length shall be protected with corrosion inhibiting coating (same as above), covered with plastic sheathing and sealed with a split sleeve. Sleeve shall be filled with grease by pumping grease through a grease nipple. Plastic cap shall have positive mechanical connection to anchor. Friction fit is not acceptable.

O. Nails for attaching anchor assemblies to forms:

1. Stainless steel ring nails, Clendenin Bros., Baltimore, MD, or equal as acceptable to Engineer.
2. If “Zero Void” used, nail-less pocket former is only acceptable attachment method.

P. Design Forces and Stresses:

1. Effective post-tensioning forces, after all losses have occurred, shall be determined per Article “Submittals” paragraph D of this specification.
2. Maximum tensile stress in post-tensioning tendons due to jacking forces shall not exceed 80% of specified tensile strength or 94% of specified yield strength of post-tensioning tendon, whichever is smaller, but not greater than maximum value of existing post-tensioning tendons.
3. Maximum tensile stress in post-tensioning tendons immediately after anchorage shall not exceed 70% of specified tensile strength.
4. Slip of strand at anchorage shall not exceed 0.25 in. Measured elongation shall be within ± 7% of calculated.

©2016, Walker Parking Consultants/Engineers, Inc. All rights reserved.

2.2 ACCESSORIES

A. Tendon supports: Bolsters, chairs, spacers, and other devices for spacing, supporting, and fastening tendons in place. Manufacture tendon supports according to CRSI's "Manual of Standard Practice" from all plastic of greater compressive strength than concrete, and as follows:

1. In manner acceptable to Engineer solely, tendon supports shall be color-coded to visually differentiate supports by height and shall be fabricated to resist over-turning during construction operations.
2. For concrete surfaces exposed to view where tendon supports contact forms, supports shall have minimal contact, shall not cause voids and shall not cause damage to surrounding concrete. Use all-plastic supports conforming to CRSI Class 1 protection requirements.
3. Chairs shall be sized and spaced to prevent cover loss during construction operations.
4. Acceptable manufacturers:

   a. Aztec Concrete Accessories, Inc.
   b. General Technologies, Inc.
   c. Accepted equivalent.

2.3 GROUT MATERIALS

A. Nonmetallic Shrinkage-Resistant Grout: To be used for tendon pocket and NOT FOR HEADER CONCRETE. Premixed, nonmetallic, noncorrosive, nonstaining product containing selected silica sands, Portland cement, shrinkage compensating agents, plasticizing and water reducing agents, complying with ASTM C 1107, Grade B, with fluid consistency and a 30-minute working time.

B. Products: Subject to compliance with requirements, provide one of following:

1. Nonmetallic Shrinkage-Resistant Grout:

   a. Sure Grip Grout, Dayton Superior.
   b. Euco N.S., Euclid Chemical Co.
   c. Masterflow 928, Master Builders, Inc.

PART 3 - EXECUTION

3.1 PREPARATION

A. Furnish necessary information, materials, accessories and other items for prestressing and attaining effective post-tensioning forces, after all losses have occurred, as specified in this Section.

B. Maintain post-tensioning equipment in safe, working condition.

C. Satisfactorily protect post-tensioning tendons from corrosion before placement. Provide sufficient protection for exposed prestressing steel at ends of members to prevent deterioration by rust or corrosion. No exposed strand is permitted at any time during

©2016, Walker Parking Consultants/Engineers, Inc. All rights reserved.

shipping or casting. Cut ends shall receive a protective cap in order to prevent water from being drawn into tendon by means of capillary action. Replace stripped sheathing on stressing end.

3.2 INSTALLATION

A. Placement:

1. Replace tendons in same location as removed tendon.
2. Straighten strands to produce equal stress in all tendons that are to be stressed in a concrete placement and to ensure proper positioning of anchors / couplers.
3. Install horizontal and vertical spacers or chairs to hold tendons in required position and to conform to specified profile.
4. Space tendon support chairs at 48 in. maximum.
5. Tendons and anchorages shall be supported firmly to prevent displacement during subsequent operations.
6. Stressing anchorages shall be installed perpendicular to tendon axis. Curvature in tendon profile shall not be closer than 1 ft from stressing anchorage.
7. Stressing anchorages shall be securely attached to bulkhead forms. Connections shall be sufficiently secure to prevent accidental loosening due to construction activity or during concrete placement.
8. Pocket formers at stressing and intermediate stressing anchorages shall positively preclude intrusion of concrete or cement slurry into wedge cavity during concrete placement. Depth of pocket former from exterior edge of concrete to closest surface of wedge cavity area of anchor shall not be less than 2 in.
9. Satisfactorily protect post-tensioning tendons from moisture, or corrosion prior to placement of concrete. Provide protection for exposed prestressing steel at ends of members and at intermediate anchorages/couplers to prevent water from getting on or into tendons and sheathing at all times during construction.

B. Sheathing Inspection and Repair:

1. After installing tendons in forms and before concrete casting, Installer shall inspect sheathing for possible damage.
2. Installer shall repair damaged areas by restoring corrosion preventive coating in damaged area, and repairing sheathing to satisfaction of Engineer.
3. Sheathing repair procedure:

   a. Restore tendon corrosion preventive coating in damaged area.
   b. Coat with corrosion preventive coating outside of sheathing length of damaged area, plus 2 in. beyond each end of damage. Example: If sheathing tear is 6 in. long, then corrosion preventive coated area will be 10 in. long, centered on tear.
   c. Place piece of longitudinally slit sheathing around corrosion preventive coated tendon. Slit shall be on side of tendon opposite tear. Length of slit sheathing shall overlap corrosion preventive coated area by 2 in. at each end. Example: If corrosion preventive coated area is 10 in. long, then sheathing will be 14 in. long, centered on tear.
   d. Tape entire length of slit sheathing, spirally wrapping tape around sheathing to provide at least 2 layers of tape. Taping shall overlap slit sheathing by 2 in. at each end. Before taping, sheathing shall be dry and

©2016, Walker Parking Consultants/Engineers, Inc. All rights reserved.

free of corrosion preventive coating. Example: If slit sheathing is 14 in. long, then taped area will be 18 in. long, centered on tear.

e. Repair material specified in Part 2 may be used to repair nicks or cuts < 0.25 in. long.

4. Any damage to shop assembled tendon encapsulating system, such as sheathing tears or cuts (beyond that specified as repairable), sheathing withdrawn from connecting sleeves, or connecting sleeves withdrawn from dead end anchorages shall be cause for rejection by Contractor or Engineer.

C. Tensioning:

1. Take safety precautions to prevent workers from standing behind or above jacks during tensioning.
2. Stress all post-tensioning tendons by means of hydraulic jacks, equipped with accurate reading, calibrated hydraulic pressure gauges to permit stress in post-tensioning steel to be computed at any time:

a. If deviation greater than 7% occurs between measured elongation and computed elongation for given jack gauge pressure, recalculate elongations based on actual modulus of elasticity of strand.
b. If, after jack calibration and modulus check, computed and measured elongation for given gauge pressure still deviate by more than 7%, cease tensioning operations. Review section 7.3 from “Field Procedures Manual for Unbonded Single Strand Tendons” for causes for improper elongation of tendons. Resolve deviation to satisfaction of Engineer. Do not proceed with stressing until deviation cause found and corrected.

D. Cutting Tendons After Stressing:

1. Do not cut tendons or cover pockets until stressing records reviewed and accepted by Engineer.
2. Clean strands, anchorages and pockets of corrosion preventive coating with non-corrosive solvent before removal of excess length of post-tensioning tendons.
3. Sever each strand using following method:

a. “GTI Plasma Cutter,” by General Technologies, Inc. 281/240-0550 or approved equal ‘cold cut’ shear device.
b. Sever strand within pocket, allowing for no less than 0.75 in. of concrete cover over end of each tendon. Leave all strand ends clean and free of burrs. All strand ends shall be accessible for inspection prior to and during severing, protective end cap placement and/or grout. Do not use oxyacetylene torches to sever strand unless Engineer accepts in writing before cutting.

4. Do not damage strand, anchorage or concrete during removal of excess length of strand.
5. For encapsulated systems, strands shall be cut and watertight cap, with grease, installed no more than 96 hours after acceptance of stressing records.
6. Encapsulate center-pull tendon splice coupling and coupler with properly sized 3M heat shrink tubing. Extend heat shrink tubing onto tendon sheathing.

©2016, Walker Parking Consultants/Engineers, Inc. All rights reserved.

3.3 FIELD QUALITY CONTROL

A. Contractor: Inspect tendons after installation. Repair or replace nonconforming work.

B. Contractor: Encapsulated tendons shall not be exposed to weather in any location more than 7 calendar days prior to concrete placement. Bare strand never permitted.

C. Contractor: Tendon sheathing damaged over more than 10% of length shall be rejected. Damaged length need not be continuous.

D. Installer: Before concrete placement around sheathing, all sheathing damage shall be repaired to watertight condition. Repairs shall be acceptable to Engineer.

E. Contractor: Inspect sheathing for unrepaired damage, for watertight seal between sheathing and anchor, and for correct installation of anchors, before concrete is placed around tendons.

3.4 PROTECTION

A. After removing excess length of strand, exposed end of strand and wedges shall be made watertight immediately by covering with approved corrosion preventive coating-filled tendon cap, or by other acceptable methods.

B. After sealing exposed end of strand and wedges, and before grouting tendon pocket, coat pocket surfaces with bonding agent.

C. Grout tendon pockets solid with non-shrink, non-stain, chloride free grout as specified in this Section.

3.5 EXTRA STOCK

A. Maintain on site adequate supplies of repair tape and tendon corrosion preventive coating to make repairs.

B. Maintain spare jack on site during post-tensioning operations.

3.6 REPAIRS

A. General Contractor: Responsible for all repairs.

B. Installer: Submit repair procedures to Engineer for evaluation and acceptance.

END OF SECTION 03381

© Copyright 2016. All rights reserved. No part of this document may be reproduced in any form or by any means without permission from Walker Parking Consultants/Engineers, Inc.

SECTION 03700 - LATEX MODIFIED CONCRETE AND MORTAR

PART 1 - GENERAL

1.1 RELATED DOCUMENTS

A. Drawings and general provisions of Contract, including General and Supplementary Conditions and Division 1 Specification Sections apply to this Section.

1.2 SUMMARY

A. This Section includes the provision of all labor, materials, and equipment necessary for production and installation of latex modified concrete or mortar for patching floor spalls and overlays.

B. Related Sections: Following Sections contain requirements that relate to this Section:

1. Division 2 Section "Surface Preparation for Patching."
2. Division 7 Section "Waterproofing System."
3. Division 9 Section "Pavement Marking."

1.3 QUALITY ASSURANCE

A. Work shall conform to requirements of ACI 301 and ACI 318 except where more stringent requirements are shown on Drawings or specified in this Section.

B. Testing Agency:

1. Independent testing laboratory employed by Owner and acceptable to Engineer.
2. Accredited by AASHTO under ASTM C1077. Testing laboratory shall submit documented proof of ability to perform required tests.

C. Sampling and testing of concrete and mortar shall be performed by ACI certified Concrete Field Technicians Grade I. Certification shall be no more than 3 years old.

D. Testing Agency is responsible for conducting, monitoring and reporting results of all tests required under this Section. Testing Agency has authority to reject concrete or mortar not meeting Specifications.

E. Proportioning, production, placement and finishing of latex modified concrete or mortar shall be overseen by, and have approval of, latex manufacturer. Latex admixture supplier shall make available qualified individual experienced in placement of latex modified concrete overlays, to aid Contractor during placement of all latex modified concrete overlay. Qualification of supplier's representative shall be acceptable to Engineer.

©2016, Walker Parking Consultants/Engineers, Inc. All rights reserved.

F. Contractor shall have at least three years previous experience installing latex modified concrete and shall have performed minimum of three projects of similar nature.

G. Testing Agency shall submit following information for field testing of concrete unless modified in writing by Engineer:

1. Project name and location.
2. Contractor's name.
3. Testing Agency's name, address and phone number.
4. Concrete supplier.
5. Date of report.
6. Testing Agency technician's name (sampling and testing).
7. Placement location within structure.
8. Concrete mix data (quantity and type):

    a. Cement.
    b. Fine aggregates.
    c. Coarse aggregates.
    d. Water.
    e. Water/cement ratio.
    f. Latex emulsion.
    g. Latex emulsion per cu yd of concrete.
    h. Other admixtures.

9. Weather data:

    a. Air temperatures.
    b. Weather.
    c. Wind speed.

10. Field test data:

    a. Date, time and place of test.
    b. Slump.
    c. Air content.
    d. Unit weight.
    e. Concrete temperature.

11. Compressive test data:

    a. Cylinder number.
    b. Age of concrete when tested.
    c. Date and time of cylinder test.
    d. Curing time (field and lab).
    e. Compressive strength.
    f. Type of break.

©2016, Walker Parking Consultants/Engineers, Inc. All rights reserved.

1.4 REFERENCES

A. American Concrete Institute (ACI):

1. ACI 214, "Recommended Practice for Evaluation of Strength Test Results of Concrete."
2. ACI 301, "Standard Specifications for Structural Concrete ."
3. ACI 302.1R, "Guide for Concrete Floor and Slab Construction."
4. ACI 305R, "Hot Weather Concreting."
5. ACI 306R, "Cold Weather Concreting."
6. ACI 306.1, "Standard Specification for Cold Weather Concreting."
7. ACI 318, "Building Code Requirements for Reinforced Concrete."
8. ACI 347, "Recommended Practice for Concrete Formwork."

B. American Society for Testing and Materials (ASTM):

1. ASTM C31, "Method of Making and Curing Concrete Test Specimens in the Field."
2. ASTM C33, "Specification for Concrete Aggregates."
3. ASTM C39, "Test Method for Compressive Strength of Cylindrical Concrete Specimens."
4. ASTM C94, "Specification for Ready-Mixed Concrete."
5. ASTM C109, "Test Method for Compressive Strength of Hydraulic Cement Mortars (Using 2-in. or 50-mm Cube Specimens)."
6. ASTM C138, "Test Method for Unit Weight, Yield, and Air Content (Gravimetric) of Concrete."
7. ASTM C143, "Test Method for Slump of Portland Cement Concrete."
8. ASTM C150, "Specification for Portland Cement."
9. ASTM C172, "Method of Sampling Freshly Mixed Concrete."
10. ASTM C173, "Test Method for Air Content of Freshly Mixed Concrete by the Volumetric Method."
11. ASTM C231, "Test Method for Air Content of Freshly Mixed Concrete by the Pressure Method."
12. ASTM C260, "Specification for Air-Entraining Admixtures for Concrete."
13. ASTM C494, "Specification for Chemical Admixtures for Concrete."
14. ASTM C685, "Specification for Concrete Made by Volumetric Batching and Continuous Mixing."
15. ASTM C1040, "Standard Test Method for Density of Unhardened and Hardened Concrete by Nuclear Methods."
16. ASTM C1077, "Standard Practice for Testing Concrete and Concrete Aggregates for Use in Construction and Criteria for Laboratory Evaluation."
17. ASTM C1218, "Sampling and Testing for Water Soluble Chloride Ion in Concrete and Concrete Raw Materials."

C. Concrete Reinforcing Steel Institute (CRSI):

1. CRSI MSP, "Manual of Standard Practice."

©2016, Walker Parking Consultants/Engineers, Inc. All rights reserved.

D. Contractor shall have following ACI publications at Project construction site:

1. ACI SP-15, "Standard Specifications for Structural Concrete ACI 301 with selected ACI and ASTM References."
2. ACI 302.1R, "Guide for Concrete Floor and Slab Construction."
3. ACI 305R, "Hot Weather Concreting."
4. ACI 306R, "Cold Weather Concreting."
5. ACI 306.1, "Standard Specification for Cold Weather Concreting."

1.5 SUBMITTALS

A. Make submittals in accordance with requirements of Division 1 of this Specification, and as herein specified.

B. Contractor shall submit concrete mix design reviewed and approved by latex manufacturer to Engineer 2 weeks prior to placing concrete. Use mix design submittal form included at end of this Section. Proportion mix designs as defined in ACI 301, 4.2.3. Include following information for each concrete mix design:

1. Method used to determine proposed mix design (per ACI 301, 4.2.3).
2. Gradation of fine and coarse aggregates: ASTM C33.
3. Proportions of all ingredients including all admixtures added either at time of batching or at job site.
4. Water-cement ratio.
5. Slump: ASTM C143.
6. Certification of chloride content of admixtures.
7. Air content of freshly mixed concrete by pressure method, ASTM C231.
8. Unit weight of concrete: ASTM C138.
9. Strength at 3 and 28 days.
10. Water soluble chloride ion content of concrete per ASTM C1218.

C. Contractor: At pre-concrete meeting, submit procedures to protect fresh concrete from rain and hot and cold weather conditions.

D. Testing Agency: Promptly report all concrete test results to Engineer, Contractor and concrete supplier. Include following information:

1. See Article "Quality Assurance," paragraph "Testing Agency shall submit...."
2. Weight of concrete, ASTM C138.
3. Slump, ASTM C143.
4. Air content of freshly mixed concrete by pressure method, ASTM C231 or volumetric method, ASTM C173.
5. Concrete temperature (at placement time).
6. Air temperature (at placement time).
7. Strength determined in accordance with ASTM C39.

E. Concrete batched on-site shall be placed and finished within 30 minutes of adding water to mixture.

©2016, Walker Parking Consultants/Engineers, Inc. All rights reserved.

F. See requirements of Division 1 Section, “Submittal Procedures,” Part 1 heading, “Submittal Procedures,” for limits to resubmittals.

G. See requirements of Division 1 Section, “Submittal Procedures,” Part 2 heading, “Requests for Information,” for RFI constraints.

PART 2 - PRODUCTS

2.1 MATERIALS

A. Aggregates (ACI 301, Article 4.2.1):

1. Normal weight concrete aggregates:

   a. Coarse aggregate: Crushed and graded limestone or approved equivalent conforming to ASTM C33, Class Designation 5S.
   b. Fine aggregate: Natural sand conforming to ASTM C33 and having preferred grading shown for normal weight aggregate in ACI 302.1R, Table 4.2.1.

2. Coarse aggregate: Nominal sizes indicated below, conforming to ASTM C33, Table 2:

   a. 0.375 in. for patch cavities 0.75 to 1.5 in. deep.
   b. 0.5 in. for patch cavities greater than 1.5 in. deep and overlay work. For overlays limit maximum size of aggregates to one-third nominal thickness of overlay.

3. Chloride Ion Level: Chloride ion content of aggregates shall be tested by laboratory making trial mixes. Also, total water soluble chloride ion content of mix including all constituents shall not exceed 0.06% chloride ions by weight of cement for prestressed concrete, and 0.15% chloride ions by weight of cement for reinforced concrete. Test to determine chloride ion content shall conform to Test Method ASTM C1218.

B. Cement (ACI 301, 4.2.1.1):

1. Portland cement, Type I, ASTM C150. Use 1 cement clinker source throughout project. No change in brand without prior written approval from Engineer.

C. Water (ACI 301, 4.2.1.3):

1. ASTM C94.

D. Latex Emulsion:

1. "Dow Reichhold Modifier A/NA, Dow Reichhold Specialty Latex LLC, Research Triangle Park, N.C.
2. "Styrofan 1186," BASF Corporation, Chattanooga, TN.

©2016, Walker Parking Consultants/Engineers, Inc. All rights reserved.

E. Admixtures (ACI 301, 4.2.1.4):

1. Only admixtures listed shall be acceptable. Do not submit alternates.
2. Concrete supplier and manufacturer shall certify compatibility of all ingredients in each mix design.
3. Use admixtures in strict accordance with manufacturer's recommendations.
4. Prohibited Admixtures: Calcium chloride, thiocyanates or admixtures containing more than 0.5% chloride ions, by weight of admixture, are not permitted. Additionally, each admixture shall not contribute more than 5 ppm, by weight, of chloride ions to total concrete constituents.

F. Storage of Materials (ACI 301, 4.1.4).

2.2 CONCRETE MIX DESIGN

A. Selection of concrete proportions shall be in accordance with ACI 301, 4.2.3.1. Before any concrete is placed for project, Contractor shall submit to Engineer data showing method used for determining proposed concrete mix design, including fine and coarse aggregate gradations, proportions of all ingredients, water-cement ratio, slump, air content, cylinder breaks and other required data specified in Article "Submittals," second para, for each different concrete type specified. Mix design shall meet following minimum requirements:

Compressive Strength	4500 psi @ 28 days (2500 psi @ 3 days)
Water-Cement Ratio	0.25 to 0.35
Latex Content Per Sack of Cement	3.5 gal.
Slump*	4 in. ± 2 in.
Cement Content	658-800 lb./c.y.
Air Content	3% or less

*For concrete placed by vibratory screeds, slump shall not exceed 4 in. at point of deposit.

B. Chloride Ion Level: See Article "Materials," paragraph "Chloride Ion Level."

C. Bonding Grout: Bonding grout shall consist of sand, cement, and latex emulsion in proportions similar to mortar in concrete with sufficient water to form stiff slurry to achieve consistency of "pancake batter."

2.3 PREBAGGED LATEX MODIFIED CONCRETE

A. The following product is an approved prebagged latex modified concrete:

“LM-S10” by King Packaged Materials Company, Burlington, Ontario. 800-461-0566

Or Engineer approved equivalent.

©2016, Walker Parking Consultants/Engineers, Inc. All rights reserved.

PART 3 - EXECUTION

3.1 PRODUCTION OF MORTAR OR CONCRETE

A. Production of latex modified mortar or concrete shall be in accordance with requirements of ACI 301, 4.3.1, except as otherwise specified herein.

B. Concrete or mortar, mixed at site, shall be proportioned by continuous mixer used in conjunction with volumetric proportioning. Volumetric batching/continuous mixers shall conform to ASTM C685. In addition, self-contained, mobile, continuous type mixing equipment shall comply with following:

1. Mixer shall be capable of producing batches of not less than 6 cu yds.
2. Mixer shall be capable of positive measurement of cement being introduced into mix. Recording meter visible at all times and equipped with ticket printout shall indicate this quantity.
3. Mixer shall provide positive control of flow of water into mixing chamber. Water flow shall be indicated by flowmeter and shall be readily adjustable to provide for minor variations in aggregate moisture.
4. Mixer shall be capable of being calibrated to automatically proportion and blend all components of indicated composition on continuous or intermittent basis, as required by finishing operation, and shall discharge mixed material through conventional chute into transporting device or directly in front of finishing machine. Sufficient mixing capacity of mixers shall be provided to permit intended pour to be placed without interruption.
5. Mixer shall be calibrated to accurately proportion specified mix. Yield is required to be within tolerance of 1.0 %.

C. On-site mortar or concrete batching in mixer of at least 0.125 cu yd capacity shall be permitted only with approval of Engineer. On-site concrete batching and mixing shall comply with requirements of ACI 301, 4.3.1.

3.2 PREPARATION (ACI 301, 5.3.1)

A. Cavity surfaces shall be clean and dry prior to commencement of patch or overlay installation. Preparation of surfaces to receive new concrete shall be in accordance with Section "Surface Preparation for Patching" and/or "Surface Preparation for Overlay."

B. Bonding Grout:

1. Bonding grout shall be applied to damp (but not saturated) concrete surface in uniform thickness of 0.0625 in. to 0.125 in. over all surfaces to receive patching or overlay.
2. Grout shall not be allowed to dry or dust prior to placement of patch or overlay material. If concrete placement is delayed and the coating dries, cavity or surface shall not be patched or overlaid until it has been recleaned and prepared as specified in Section "Surface Preparation for Patching" or "Surface Preparation

©2016, Walker Parking Consultants/Engineers, Inc. All rights reserved.

for Overlay." Grout shall not be applied to more area than can be patched or overlaid within 0.5 hr by available manpower.

C. Receive Owner's and Engineer's written approval of concrete surface finish used on flatwork before beginning of construction.

3.3 INSTALLATION

A. Placing (ACI 301, 5.3.2):

1. Do not place concrete when temperature of surrounding patch area or air is less than 50° F. unless following conditions are met:

   a. Place concrete only when temperature of surrounding air is expected to be above 45° F. for at least 36 hours.
   b. When above conditions are not met, concrete may be placed only if insulation or heating enclosures are provided in accordance with ACI 306, "Recommended Practice for Cold Weather Concreting." Submit proposed protective measures in writing for Engineer's review prior to concrete placement.
   c. Cost for precautionary measures required shall be borne by Contractor.

2. Concrete shall be manipulated and struck off slightly above final grade. Concrete shall then be consolidated and finished to final grade with internal and surface vibration devices. Proposed consolidation method shall be submitted for Engineer's review prior to concrete placement.

   a. Do not place concrete if mix temperature exceeds 85° F.
   b. Do not place concrete under hot weather conditions. Hot weather is defined as air temperature which exceeds 80° F. or any combination of high temperature, low humidity and high wind velocity which causes evaporation rates in excess of 0.10 psf per hr as determined by ACI 305R, Figure 2.1.5.

3. Fresh concrete 3 in. or more in thickness shall be vibrated internally in addition to surface vibration.
4. Concrete shall be deposited as close to its final position as possible. All concrete shall be placed in continuous operation and terminated only at bulkheads or designated control or construction joints.
5. On ramps with greater than 5 % slope, all concreting shall begin at low point and end at high point. Contractor shall make any necessary adjustment to slump or equipment to provide wearing surface without any irregularities or roughness.
6. For overlays concrete consolidation shall be by vibrating screeds meeting following requirements:

   a. Placing and finishing equipment shall not exceed maximum weight of 6,000 lbs or 3,000 lbs per axle.
   b. Screed shall be designed to consolidate concrete to 98% of unit weight determined in Section 2.04.A in accordance with ASTM C138. Sufficient number of identical vibrators shall be effectively installed such that at least 1 vibrator is provided for each 5 ft of screed length.

©2016, Walker Parking Consultants/Engineers, Inc. All rights reserved.

c. Bottom face of screeds shall not be less than 4 in. wide and shall be metal covered with turned-up or rounded leading edge to minimize tearing of surface of plastic concrete.
d. Screed shall be capable of forward and reverse movement under positive control. Screed shall be provided with positive control of vertical position and angle of tilt.
e. Screed shall be capable of vibrating at controlled rate, adjustable to between 3,000 and 6,000 vpm.

B. Finishing (ACI 301, 5.3):

1. Flatwork (BROOM Finish, 5.3.4.2.d):

a. When tight and uniform concrete surface has been achieved by screeding and finishing operation, give slab surface coarse transverse scored texture by drawing broom across surface. Texture shall be accepted by Owner and Engineer from sample panels.
b. Finishing tolerance: ACI 301, 5.3.4.2; Class B tolerance.
c. Finish all concrete surfaces to proper elevations to insure that all surface moisture will drain freely to floor drains, and that no puddle areas exist. Contractor shall bear cost of any corrections to provide for positive drainage.
d. Before installation of overlay and after submittal, review, and approval of concrete mix design, Contractor shall fabricate 2 acceptable test areas simulating finishing techniques and final appearance to be expected and used on Project. Test overlay area shall be minimum of 200 sq ft and shall be cast to thickness of typical wearing surface in Project. Test overlay areas shall be cast from concrete supplied and batched in accordance with project specifications. Contractor shall finish test areas following requirements of items a and b above, and shall adjust finishing techniques to duplicate appearance of concrete surface of each test area. Finished overlay areas (1 or both) may be rejected by Owner or Engineer, in which case Contractor shall repeat procedure until Owner or Engineer acceptance is obtained. Accepted test overlay areas shall be cured in accordance with Specifications. Accepted test areas shall serve as basis for acceptance/rejection of final finished surfaces of all flatwork.

C. Joints in Concrete (ACI 301, 2.2.2.5):

1. Construction, control and isolation joints are located and detailed on Drawings:

a. Tool joints at time of finishing. Sawcut joints are prohibited.
b. Isolation joints - interrupt structural continuity resulting from bond, reinforcement or keyway.
c. Coordinate configuration of tooled joints with control joint sealants.

©2016, Walker Parking Consultants/Engineers, Inc. All rights reserved.

D. Curing:

1. Latex modified mortar and concrete shall be cured according to latex manufacturer's recommendations and according to following minimum requirements:

   a. Surface shall be covered with single layer of clean, wet burlap as soon as surface will support it without deformation. Cover burlap with continuous single thickness of polyethylene film for 24 hours.
   b. After 24 hours remove polyethylene film and allow burlap to dry slowly for an additional 24 to 48 hours.
   c. Remove burlap and allow concrete to air dry for an additional 48 hours.
   d. Curing time shall be extended, as Engineer directs, when curing temperature falls below 50° F.

E. Repair of Defects (ACI 301, 5.3.7):

1. Repair all surface defects exceeding 0.25 in. width or depth.
2. Match color of concrete to be repaired.
3. Submit samples of materials and relevant literature and test data on proprietary compounds and procedures used for adhesion or patching ingredients to Engineer for its review before patching concrete.
4. Receive written approval of Engineer of method and materials prior to making repairs to concrete.

3.4 FIELD QUALITY CONTROL BY TESTING AGENCY (ACI 301, 1.6)

A. Air Content:

1. Sample freshly-mixed concrete per ASTM C172 and conduct 1 air content test per ASTM C231 or ASTM C173 for each 10 cu yds of concrete placed or each day's production, whichever is less.

B. Concrete Compressive Strength:

1. Mold test cylinders in accordance with ASTM C31 and test in accordance with ASTM C31 as follows:

   a. Take minimum of 6 cylinders for each 25 cu yds or fraction thereof, of each mix design of concrete placed in any 1 day. Use of 4 in. x 8 in. cylinders in lieu of standard cylinders is acceptable.
   b. Additional 2 cylinders shall be taken and field cured under conditions of cold weather concreting, and when directed by Engineer.

2. Cover specimens properly, immediately after finishing. Protect outside surfaces of cardboard molds, if used, from contact with sources of water for first 24 hours after molding.

©2016, Walker Parking Consultants/Engineers, Inc. All rights reserved.

3. Fabricate and cure test cylinders per ASTM C31, except as follows:

   a. To verify compressive strength, test cylinders required due to cold weather concreting conditions:

      1) Store test specimens on structure as near to point of sampling as possible and protect from elements in same manner as that given to portion of structure as specimen represents.
      2) Transport to test laboratory no more than 4 hours before testing. Remove molds from specimens immediately before testing.

   b. To verify 28-day compressive strength:

      1) During first 24 hours after molding, store test specimens under conditions that maintain temperature immediately adjacent to specimens in range of 60 to 80° F. and prevent loss of moisture from specimens.
      2) Remove test specimens from molds at end of 20 ± 4 hours and store at 73 ± 3° F., 50 ±4% relative humidity in laboratory until moment of test.

4. Compression tests:

   a. Test 2 cylinders at 3 days.
   b. Test 2 cylinders at 28 days.
   c. Hold 2 cylinders in reserve for use as Engineer directs.

5. Unless notified by Engineer, reserve cylinders may be discarded without being tested after 56 days.

C. Slump Test:

1. Conduct 1 slump test in accordance with ASTM C143 for each 10 yards of concrete placed, or each day's production, whichever is less.

D. Yield and Proportioning Tests (ASTM C685):

1. When concrete placements involve more than 100 cu yds, accuracy of on-site batching equipment output indicators shall be verified at 50 cu yd intervals.
2. Accuracy of on-site batching equipment proportioning of concrete mixture shall be verified at 100 cu yd intervals.

E. Evaluation and Acceptance of Concrete (ACI 301, 1.6.7 and ACI 318, 4.7):

1. Concrete compression tests will be evaluated by Engineer in accordance with ACI 301, 1.6.7. If number of tests conducted is inadequate for evaluation of concrete or test results for any type of concrete fail to meet specified strength requirements, core tests may be required as directed by Engineer.
2. Core tests, when required, per ACI 301, 1.6.7.3.
3. Should tested hardened concrete meet these specifications, Owner will pay for coring and testing of hardened concrete. Should tested hardened concrete not

©2016, Walker Parking Consultants/Engineers, Inc. All rights reserved.

meet these specifications, concrete contractor will pay for coring and testing of hardened concrete and for any corrective action required for unaccepted concrete.

F. Acceptance of Structure (ACI 301,1.7):

1. Acceptance of completed concrete Work will be according to provisions of ACI 301, 1.7.
2. Patched and overlaid areas shall be sounded by Contractor with chain drag after curing for 7 days. Contractor shall repair all hollowness detected by removing and replacing patch or affected area at no extra cost to Owner.
3. If shrinkage cracks appear in overlay when initial 24 hours curing period is completed, overlay shall be considered defective, and it shall be removed and replaced by Contractor at no extra cost.

END OF SECTION 03700

© Copyright 2016. All rights reserved. No part of this document may be reproduced in any form or by any means without permission from Walker Parking Consultants/Engineers, Inc.

©2016, Walker Parking Consultants/Engineers, Inc. All rights reserved.

MIX DESIGN SUBMITTAL FORM
LATEX MODIFIED CONCRETE
(Submit separate form for each mix design)

I. GENERAL INFORMATION	
Project:	City:
General Contractor:	
Mix Design Identification No.:	
Use (Describe)[1]:	

[1] Overlay, Floor Patching, Beam Repairs, etc.

II. MIX DESIGN PREPARATION:		
Mix Design Based on (Check one):	Standard Deviation Analysis: or	Trial Mix Test Data:
Design Characteris-tics:	Density: _____ pcf;	Air: _____ %
	Strength: _____ psi (28 day);	Slump _____ in.

Latex Manufacturer Approval

Name: _____

Title: _____

Date: _____

WALKER ACCEPTANCE STAMP

©2016, Walker Parking Consultants/Engineers, Inc. All rights reserved.

III. MATERIALS:		
Aggregates: (size; type; source; gradation report; specification)		
Coarse:		
Fine:		
Other Materials:	Type	Product-Manufacturer (Source)
Cement:		
Latex Admixture:		
Other(s):		

©2016, Walker Parking Consultants/Engineers, Inc. All rights reserved.

IV. MIX PROPORTIONS (per yd^3)		
	WEIGHT (lbs.)	**ABSOLUTE VOL.** (cu. ft.)
Cement:		
Fine Aggregate: (1)		
Coarse Aggregate: (1)		
Latex:(2)		
Water: (3)		
Other(s):		
TOTALS:		

NOTES:

(1) Based on saturated surface dry weights of aggregates.

(2) Include only weight of solids portion of latex admixture. Confirm with manufacturer actual percentages of solids and water in suspension and coordinate with Note 3.

(3) Includes **ALL WATER**, including added water, free water contained on aggregates, and water suspension portion of latex admixture.

©2016, Walker Parking Consultants/Engineers, Inc. All rights reserved.

V. RATIOS	
Water [4] =	_____ lb.
Cement	lb.
Fine Agg. =	_____ lb.
Total Agg	lb.

VI. SPECIFIC GRAVITIES
Fine Aggregate
Coarse Aggregate

VII. ADMIXTURES		
Air Entraining Agent (A.E.A.):	_____ oz.	per 100# cement
Water Reducer	_____ oz.	per 100# cement
Latex Emulsion	_____ gal	per sack cement
Other(s)		

©2016, Walker Parking Consultants/Engineers, Inc. All rights reserved.

VIII. STANDARD DEVIATION ANALYSIS:	**Yes**	**N/A**
(Complete this section only if mix design was developed using standard deviation analysis of previous project test results. If other method was used, check "N/A".)		
Number of Test Cylinders Evaluated:	Standard Deviation:	
Mix Designs Proportioned to Achieve f'cr = f'c + _____ psi		
NOTE: Mix designs shall be proportioned to achieve f'cr equal to or greater than the larger of f'cr = f'c + 1.34s [s= calculated standard deviation] or f'cr = f'c + 2.33s - 500 (Refer to ACI 301 for increased deviation factor when less than 30 tests are available.)		

©2016, Walker Parking Consultants/Engineers, Inc. All rights reserved.

IX. TRIAL MIXTURE TEST DATA:		**Yes**	**N/A**
(Complete this section only if mix design is based on data from trial test mixture(s) batched by testing agency or Contractor. If other method was used, check "N/A".)			
Age (days)	Trial Mix #1 (comp. str.)	Trial Mix #2 (comp. str.)	Trial Mix #3 (comp. str.)
7			
7			
28			
28			
28 day average compressive strength: _____ psi			
DESIGN MIX CHARACTERISTICS			
Slump = _____ in.		Air Content = _____ %	
Unit Wet Wt. = _____ pcf		Unit Dry Wt. = _____ pcf	
Mix Design Proportioned to Achieve: f'c + 1200 psi (1200 psi increases to 1400 psi when f'c > 5000 psi)			
ACTUAL MIX CHARACTERISTICS			
Initial Slump = _____ in.		Final Slump _____ in.	
Unit Wet Wt.= _____ pcf.		Unit Dry Wt. = _____ pcf	
Air Content = _____ %			

©2016, Walker Parking Consultants/Engineers, Inc. All rights reserved.

X. OTHER REQUIRED TESTS
Soluble Chloride Ion Content of mix: _____ % by weight of cement (Water soluble by ASTM 1218 OR AASHTO T260)

XI. Remarks:

Submitted by:

Latex Modified Concrete Supplier
Name:
Address:
Phone Number:
Date:

My signature below certifies that I have read, understood, and will comply with the requirements of this Section.

Signature_____

Typed or Printed Name _____

©2016, Walker Parking Consultants/Engineers, Inc. All rights reserved.

REQUIRED ATTACHMENTS	
	Coarse aggregate grading report
	Fine aggregate grading report
	Concrete compressive strength data used for standard deviation calculations
	Chloride ion data and related calculations
	Admixture compatibility certification letter

INSTRUCTIONS:

1. Fill in all blank spaces. Use -0- (Zero) or N.A. (Not Applicable) where appropriate. See "Design and Control of Concrete Mixtures: 13th Edition by Portland Cement Association, for assistance in completing this form.
2. Provide the necessary documentation to support any laboratory test results or compliance to standard ASTM test methods or specifications referenced in the mix design submittal form.
3. If mix design utilizes multiple aggregate material sources, submit chloride ion content test data of each component from material suppliers. Test data shall be not more than 1 yr old.

Attach letter of certification that all admixtures, including latex admixture, are compatible for this mix design.

© Copyright 2016. All rights reserved. No part of this document may be reproduced in any form or by any means without permission from Walker Parking Consultants/Engineers, Inc.

SECTION 03720 - TROWEL APPLIED MORTAR

PART 1 - GENERAL

1.1 RELATED DOCUMENTS

A. Drawings and general provisions of Contract, including General and Supplementary Conditions and Division 1 Specification Sections apply to this Section.

1.2 SUMMARY

A. This Section includes the provision of all labor, materials, supervision and incidentals necessary to prepare deteriorated or damaged concrete surfaces and install patches to overhead and vertical surfaces to restore original surface condition and integrity.

B. Related Sections: Following Sections contain requirements that relate to this Section:

1. Division 2 Section "Surface Preparation for Patching."

1.3 QUALITY ASSURANCE

A. Work shall conform to requirements of ACI 301 as applicable except where more stringent requirements are shown on Drawings or specified in this Section.

B. Testing Agency:

1. Independent testing laboratory employed by Owner and acceptable to Engineer/Architect.
2. Accredited by AASHTO under ASTM C1077. Testing laboratory shall submit documented proof of ability to perform required tests.

C. Sampling and testing of mortar shall be performed by ACI certified Concrete Field Technicians Grade I. Certification shall be no more than three years old.

D. Testing Agency is responsible for conducting, monitoring and reporting results of all tests required under this Section. Testing Agency has authority to reject mortar not meeting Specifications.

E. Testing Agency shall submit following information for Field Testing of Concrete unless modified in writing by Engineer/Architect:

1. Project name and location.
2. Contractor's name.
3. Testing Agency's name, address and phone number.
4. Mortar manufacturer.

©2016, Walker Parking Consultants/Engineer/Architects, Inc. All rights reserved.

5. Date of report.
6. Testing Agency technician's name (sampling and testing).
7. Placement location within structure.
8. Weather data:

    a. Air temperatures.
    b. Weather.
    c. Wind speed.

9. Date, time, and place of test.
10. Compressive test data:

    a. Cube number.
    b. Age of mortar when tested.
    c. Date and time of cube test.
    d. Compressive strength.

1.4 REFERENCES

A. "Standard Specification for Structural Concrete" (ACI 301) by American Concrete Institute, herein referred to as ACI 301, is included in total as specification for this structure except as otherwise specified herein.

B. Comply with provisions of following codes, specifications and standards except where more stringent requirements are shown on Drawings or specified herein:

1. "Building Code Requirements for Structural Concrete" (ACI 318), American Concrete Institute, herein referred to as ACI 318.
2. "Hot Weather Concreting" reported by ACI Committee 305.
3. "Cold Weather Concreting" reported by ACI Committee 306.

C. Contractor shall have following ACI publications at Project construction site at all times:

1. "Standard Specifications for Structural Concrete (ACI 301) with Selected ACI and ASTM References," ACI Field Reference Manual, SP15.
2. "Hot Weather Concreting" reported by ACI Committee 305.
3. "Cold Weather Concreting" reported by ACI Committee 306.

D. American Society for Testing and Materials (ASTM):

1. ASTM C109, "Test Method for Compressive Strength of Hydraulic Cement Mortars (Using 2-in. or 50-mm Cube Specimens)."

1.5 SUBMITTALS

A. Make submittals in accordance with requirements of Division 1 and as specified in this Section.

©2016, Walker Parking Consultants/Engineer/Architects, Inc. All rights reserved.

B. Contractor: At preconcrete meeting, submit procedures to protect fresh patches from severe weather conditions.

C. Testing Agency: Promptly report all mortar test results to Engineer/Architect and Contractor. Include following information:

1. See Article "Quality Assurance," paragraph "Testing Agency shall submit...."
2. Strength determined in accordance with ASTM C109.

D. See requirements of Division 1 Section, “Submittal Procedures,” Part 1 heading, “Submittal Procedures,” for limits to resubmittals.

E. See requirements of Division 1 Section, “Submittal Procedures,” Part 2 heading, “Requests for Information,” for RFI constraints.

PART 2 - PRODUCTS

2.1 MATERIALS

A. Acceptable materials shall have minimum 3 day compressive strength of 3,000 psi and 5,000 psi at 28 days as certified by manufacturer.

B. Acceptable materials for this Work are:

1. "Structurite with Acryl 60," Thoro, A Division of Degussa Building Systems, Shakopee, MN.
2. "Renderoc HB2 or HBA," Thoroc, a Division of Degussa Building Systems, Shakopee, MN.
3. "SikaRepair 223 with Latex R, SikaRepair 224, SikaRepair SHB, or SikaRepair SHA," Sika Corporation, Lyndhurst, New Jersey.
4. "Verticoat or SR-93," by Euclid Chemical Co.
5. “Emaco R Series,” by T. Protection & Repair, a Division of Degussa Building Systems, Shakopee, MN.
6. Other types may be used only with Engineer/Architect's approval in writing prior to bidding.

C. Repair material with Corrosion Inhibitor.

1. Repair Mortar must have Independent Test Data showing that the Corrosion Inhibitor can prevent the onset of incipient anodes.
2. Acceptable materials for this work are:

a. “SikaTop 123 Plus,” Sika Corporation, Lyndhurst, New Jersey.
b. Other types may be used only with Engineer/Architect’s approval in writing prior to bidding. Incipient anode prevention documentation must be presented for product approval.

©2016, Walker Parking Consultants/Engineer/Architects, Inc. All rights reserved.

PART 3 - EXECUTION

3.1 PREPARATION

A. Surface Preparation: Cavity surfaces shall be clean and dry prior to commencement of patch installation. Preparation of cavity to receive new mortar shall be in accordance with Section "Surface Preparation for Patching" and manufacturer's instructions.

3.2 INSTALLATION

A. Bonding Grout:

1. Apply bonding grout in strict accordance with manufacturer's recommendations.
2. If bonding grout dries, cavity shall not be patched until it has been recleaned and prepared as specified in Section "Surface Preparation for Patching." Grout shall not be applied to more cavities than can be patched within 0.25 hr by available manpower.

B. Placement: Patching materials shall be placed immediately following grout application in strict accordance with manufacturer's instructions. Properly proportioned and mixed patch material shall be placed using trowels to consolidate patch so that no voids exist within new material and continuous contact with base concrete is achieved. Supplemental wire mesh shall be required for delamination and spall repairs greater than two inches in depth. Fresh bonding grout is required between successive lifts of patching material.

3.3 CURING

A. Initial Curing: Immediately after finishing, keep patch material continually moist for at least 24 hours by misting, sprinkling, or using absorptive mat or fabric covering kept continually moist.

B. Final Curing: Curing compounds complying with ASTM C309 may be used in accordance with recommendations of ACI 506.7, "Specification for Concrete." Provide additional curing immediately following initial curing and before patch material has dried. Use one of following materials or methods:

1. Continue method used in initial curing.
2. Material conforming to ASTM C171.
3. Curing compounds conforming to ASTM C309.
4. Other moisture retaining covering as approved by Engineer/Architect.
5. Duration of Curing: Continue curing for first 7 days after patch placement. During initial and final curing periods maintain patch material above 50° F.
6. Prevent rapid drying at end of curing period.
7. Provide additional curing as required or recommended by manufacturer.

©2016, Walker Parking Consultants/Engineer/Architects, Inc. All rights reserved.

3.4 FIELD QUALITY CONTROL BY TESTING AGENCY

A. Concrete Compressive Strength:

1. Mold test cubes in accordance with ASTM C-109 as follows:

   a. Take minimum of six cubes for each 10 cu ft, or fraction thereof, of each repair mortar placed in any one day. Use 2 in. x 2 in. cubes.
   b. Additional 2 cubes shall be taken and field cured under conditions of cold weather concreting, and when directed by Engineer/Architect.

2. Cover specimens properly, immediately after finishing. Protect molds from contact with sources of water for first 24 hours after molding.
3. Fabricate and cure test cubes per ASTM C-109, except as follows:

   a. Do not remove specimens from molds before 24 hours.
   b. To verify 7 and 28-day compressive strengths:

      1) During first 24 hours after molding, store test specimens under conditions that maintain temperature immediately adjacent to specimens in range of 60 to 80° F. and prevent loss of moisture from specimens.
      2) Remove test specimens from molds at end of 24 hours and air dry in laboratory until moment of test.

   c. To verify compressive strength of test cubes required due to cold weather concreting conditions:

      1) Store test specimens on structure as near to point of sampling as possible and protect from elements in same manner as that given to portion of structure as specimen represents.
      2) Transport to test laboratory no more than 4 hours before testing. Remove molds from specimens immediately before testing.

4. Compression Test:

   a. Test 3 cubes at 3 days.
   b. Test 3 cubes at 7 days.
   c. Test 3 cubes at 28 days.
   d. Hold 3 cubes in reserve for use as Engineer/Architect directs.

5. Unless notified by Engineer/Architect, reserve cubes may be discarded without being tested after 56 days.

©2016, Walker Parking Consultants/Engineer/Architects, Inc. All rights reserved.

3.5 EVALUATION AND ACCEPTANCE OF TROWEL APPLIED MORTAR REPAIRS

A. Acceptance of Repairs (ACI 301):

1. Acceptance of completed concrete Work will be according to provisions of ACI 301.
2. Patched areas shall be sounded by Engineer/Architect and Contractor with hammer or rod after curing for 72 hours. Contractor shall repair all hollowness detected by removing and replacing patch or affected area at no extra cost to Owner.
3. If shrinkage cracks appear in patch area when initial curing period is completed, patch shall be considered defective, and it shall be removed and replaced by Contractor at no extra cost.

END OF SECTION 03720

© Copyright 2016. All rights reserved. No part of this document may be reproduced in any form or by any means without permission from Walker Parking Consultants/Engineer, Inc.

©2016, Walker Parking Consultants/Engineer/Architects, Inc. All rights reserved.

SECTION 03730 - SILICA MODIFIED CONCRETE

PART 1 - GENERAL

1.1 RELATED DOCUMENTS

A. Drawings and general provisions of Contract, including General and Supplementary Conditions and Division 1 Specification Sections apply to this Section.

1.2 SUMMARY

A. This Section includes the provision of all materials, labor, equipment and supervision to furnish and install cast-in-place microsilica concrete topping.

B. Related Sections: Following Sections contain requirements that relate to this Section:

1. Division 2 Section "Surface Preparation for Patching."
2. Division 7 Section "Waterproofing System."
3. Division 9 Section "Pavement Marking."

1.3 QUALITY ASSURANCE

A. Work shall conform to requirements of ACI 301 and ACI 318 except where more stringent requirements are shown on Drawings or specified in this Section.

B. Testing Agency:

1. Independent testing laboratory employed by Owner and acceptable to Engineer/Architect.
2. Accredited by AASHTO under ASTM C1077. Testing laboratory shall submit documented proof of ability to perform required tests.

C. Sampling and testing of concrete shall be performed by ACI certified Concrete Field Technicians Grade I. Certification shall be no more than 3 years old.

D. Testing Agency is responsible for conducting, monitoring and reporting results of all tests required under this Section. Testing Agency has authority to reject concrete not meeting Specifications.

E. Proportioning, production, placement, and finishing of microsilica concrete shall be reviewed by, and have approval of, microsilica manufacturer.

F. Microsilica admixture supplier must make available qualified individual, experienced in placement of microsilica concrete, to aid Contractor. Qualification of supplier's representative shall be acceptable to Engineer/Architect. Supplier's representative must attend preconstruction meeting and must be present for all trial placements, initial startup and then as required by Engineer/Architect.

©2016, Walker Parking Consultants/Engineers, Inc. All rights reserved.

G. Submit following information for field testing of concrete unless modified in writing by Engineer/Architect:

1. Project name and location.
2. Contractor's name.
3. Testing Agency's name, address and phone number.
4. Concrete supplier.
5. Date of report.
6. Testing Agency technician's name (sampling and testing).
7. Placement location within structure.
8. Elapsed time from batching at plant to discharge from truck at site.
9. Concrete mix data (quantity and type):

    a. Cement.
    b. Fine aggregates @ SSD.
    c. Coarse aggregates @ SSD.
    d. Water.
    e. Water/cementitious material ratio.
    f. Air entraining admixtures.
    g. Water-reducing admixture and high-range water-reducing admixture.
    h. Microsilica admixtures.
    i. Other admixtures.

10. Weather data:

    a. Air temperatures.
    b. Weather.
    c. Wind speed.
    d. Relative humidity.

11. Field test data:

    a. Date, time and place of test.
    b. Slump.
    c. Air content.
    d. Unit weight.
    e. Concrete temperature.

12. Compressive strength test data:

    a. Cylinder number.
    b. Age of concrete when tested.
    c. Date and time of cylinder test.
    d. Curing time (field and lab).
    e. Compressive strength.
    f. Type of break.

13. Rapid chloride permeability test results:

©2016, Walker Parking Consultants/Engineers, Inc. All rights reserved.

1.4 REFERENCES

A. American Concrete Institute (ACI):

1. ACI 214, "Recommended Practice for Evaluation of Strength Test Results of Concrete."
2. ACI 301, "Standard Specifications for Structural Concrete."
3. ACI 302.1R, "Guide for Concrete Floor and Slab Construction."
4. ACI 305R, "Hot Weather Concreting."
5. ACI 306R, "Cold Weather Concreting."
6. ACI 306.1, "Standard Specification for Cold Weather Concreting."
7. ACI 308, "Standard Practice for Curing Concrete."
8. ACI 318, "Building Code Requirements for Reinforced Concrete."
9. ACI 347, "Recommended Practice for Concrete Formwork."

B. American Society for Testing and Materials (ASTM):

1. ASTM C31, "Method of Making and Curing Concrete Test Specimens in the Field."
2. ASTM C33, "Specification for Concrete Aggregates."
3. ASTM C39, "Test Method for Compressive Strength of Cylindrical Concrete Specimens."
4. ASTM C94, "Specification for Ready-Mixed Concrete."
5. ASTM C109, "Test Method for Compressive Strength of Hydraulic Cement Mortars (Using 2-in. or 50-mm Cube Specimens)."
6. ASTM C138, "Test Method for Unit Weight, Yield, and Air Content (Gravimetric) of Concrete."
7. ASTM C143, "Test Method for Slump of Portland Cement Concrete."
8. ASTM C150, "Specification for Portland Cement."
9. ASTM C172, "Method of Sampling Freshly Mixed Concrete."
10. ASTM C173, "Test Method for Air Content of Freshly Mixed Concrete by the Volumetric Method."
11. ASTM C231, "Test Method for Air Content of Freshly Mixed Concrete by the Pressure Method."
12. ASTM C260, "Specification for Air-Entraining Admixtures for Concrete."
13. ASTM C457, "Practice for Microscopical Determination of Air-Void Content and Parameters of the Air-Void System in Hardened Concrete."
14. ASTM C494, "Specification for Chemical Admixtures for Concrete."
15. ASTM C666, "Test for Resistance of Concrete to Rapid Freezing and Thawing."
16. ASTM C685, "Specification for Concrete Made by Volumetric Batching and Continuous Mixing."
17. ASTM C1040, "Standard Test Method for Density of Unhardened and Hardened Concrete by Nuclear Methods."
18. ASTM C1077, "Standard Practice for Testing Concrete and Concrete Aggregates for Use in Construction and Criteria for Laboratory Evaluation."
19. ASTM C1116, "Standard Specification for Fiber-Reinforced Concrete and Shotcrete."
20. ASTM C1152, "Sampling and Testing for Total Chloride Ion in Concrete and Concrete Raw Materials."

©2016, Walker Parking Consultants/Engineers, Inc. All rights reserved.

21. ASTM C1202, "Test Method for Electrical Indication of Concrete's Ability to Resist Chloride Ion Penetration."
22. ASTM C1240, "Standard Specification for Silica Fume for Use in Hydraulic-Cement Concrete and Mortar."

C. Concrete Reinforcing Steel Institute (CRSI):

1. CRSI MSP, "Manual of Standard Practice."

D. Contractor shall have following ACI publications at Project construction site:

1. ACI SP-15, "Standard Specifications for Structural Concrete. ACI 301 with selected ACI and ASTM References."
2. ACI 302.1R, "Guide for Concrete Floor and Slab Construction."

1.5 SUBMITTALS

A. Make submittals in accordance with requirements of Division 1 of this Specification, and as herein specified.

B. Contractor shall submit concrete mix design to Engineer/Architect 2 weeks prior to placing concrete. Proportion mix designs as defined in ACI 301 4.2.3. Use mix design submittal form included at end of this Section. Mix design shall be reviewed by microsilica manufacturer prior to submitting to Engineer/Architect. Include following information for each concrete mix design:

1. Method used to determine proposed mix design (per ACI 301 4.2.3).
2. Gradation of fine and coarse aggregates: ASTM C33.
3. Proportions of all ingredients including all admixtures added either at time of batching and at job site.
4. Water/cementitious material ratio.
5. Slump: ASTM C143.
6. Certification of chloride content of admixtures.
7. Rapid chloride permeability test results.
8. Air Content:

   a. Of freshly mixed concrete by pressure method, ASTM C231, or volumetric method, ASTM C173.
   b. Of hardened concrete by microscopical determination, including parameters of air-void system, ASTM C457.

9. Unit weight of concrete, ASTM C138.
10. Strength at 7 and 28 days, ASTM C39.
11. Water soluble chloride ion content of concrete per AASHTO Method T260.

©2016, Walker Parking Consultants/Engineers, Inc. All rights reserved.

12. Mill Test Report of Silica Fume Admixture: Provide report for each 400 cu. yd. or fraction thereof, of concrete placed on project. Provide to Engineer/Architect from independent testing lab showing chemical analysis in percent by weight of silica fume solids supplied and used.

    a. Silica fume concrete admixture shall comply with ASTM C1240 and following additional requirements:

        1) Silicon dioxide content: 90% minimum.
        2) LOI: 6% maximum.

C. Contractor:

1. Submit microsilica concrete mix proportions and batching, transporting, handling, placing, finish and curing procedures one week prior to preconcrete meeting.
2. At preconcrete meeting, submit procedures to protect fresh concrete from rain and hot and cold weather conditions.

D. Testing Agency: Report all concrete test results to Engineer/Architect, concrete supplier, Contractor and Owner during construction. Include following information:

1. See Article "Quality Assurance," paragraph "Microsilica admixture supplier...."
2. Unit weight of concrete, ASTM C138.
3. Slump, ASTM C143.
4. Air content of freshly mixed concrete by pressure method, ASTM C231 or volumetric method, ASTM C173.
5. Air content and parameters of air-void system by microscopical determination, ASTM C457.
6. Concrete temperature (at placement time).
7. Air temperature (at placement time).
8. Strength determined in accordance with ASTM C39 at 7 and 28 days.
9. Rapid chloride permeability test of core samples in accordance with Test Method ASTM C1202, as and when directed by Specifications.
10. Freeze-thaw resistance, ASTM C457 and C666: If concrete cannot meet hardened air content requirements of Article "Concrete Mix Design," paragraph "Target Value for Air Entrainment," submit laboratory results of specimens with concrete mix similar to proposed mix for project. Report air void parameters (spacing factor and specific surface area) of specimens in accordance with ASTM C457. Test specimens shall contain specified entrained air content, silica fume admixture and superplasticizer.

E. See requirements of Division 1 Section, “Submittal Procedures,” Part 1 heading, “Submittal Procedures,” for limits to resubmittals.

F. See requirements of Division 1 Section, “Submittal Procedures,” Part 2 heading, “Requests for Information,” for RFI constraints.

©2016, Walker Parking Consultants/Engineers, Inc. All rights reserved.

1.6 TRANSPORTATION AND DISCHARGE

A. Concrete transported by truck mixer or agitator, when required by project specifications or accepted by Engineer/Architect, shall be completely discharged within 1 hr after water has been added to cement or cement has been added to aggregates. During hot weather concreting, discharge time shall be limited to 45 minutes.

B. When concrete is batched on site by mobile mixer used in conjunction with continuous volumetric proportioning, time between addition of water to mixture and finishing of overlay shall not exceed 30 minutes.

PART 2 - PRODUCTS

2.1 MATERIALS

A. Aggregates (ACI 301, 4.2.1.2):

1. For normal weight concrete aggregates:

   a. Coarse aggregate: Crushed and graded limestone or approved equivalent conforming to ASTM C33, Class Designation 5S.
   b. Fine aggregate: Natural sand conforming to ASTM C33 and having preferred grading shown for normal weight aggregate in ACI 302.1R, Table 4.2.1.

2. Coarse aggregate: Use 0.75 in. nominal size conforming to ASTM C33, Table 2.
3. Chloride Ion Level: Chloride ion content of aggregates shall be tested by laboratory making trial mixes. Water soluble chloride ion content of concrete shall not exceed 0.06% by weight of cement for pre-stressed concrete and 0.15% for reinforced concrete. (ACI 318 Chapter 4 Table “Maximum Chloride Ion Content for Corrosion Protection of Reinforcement”.) Test to determine chloride ion content shall conform to ASTM C 1218.

B. Cementitious Materials (ACI 301, 4.2.1.2):

1. Portland cement, Type I, ASTM C150. Use one brand throughout project. No change in brand without prior written approval by Engineer/Architect.
2. Use of microsilica: See Article "Materials," paragraph "Admixtures."

C. Water (ACI 301, 4.2.1.3):

1. ASTM C94.

D. Admixtures (ACI 301, 4.2.1.4):

1. Microsilica admixture shall be:

   a. "FORCE 10,000" or "EMSAC," by W.R. Grace & Co., Cambridge, MA.
   b. "Rheomac #SF 110 Slurry," Master Builders, Cleveland, OH.

©2016, Walker Parking Consultants/Engineers, Inc. All rights reserved.

2. Use of any admixtures must be approved in writing by Engineer/Architect prior to its use.
3. Use approved admixtures in strict accordance with manufacturer's recommendations.
4. Air entraining admixture - ASTM C260.
5. Prohibited Admixtures: Calcium chloride, thiocyanates or admixtures containing more than 1% chloride ions, by weight of admixture, are not permitted. Additionally, each admixture shall not contribute more than 5 ppm, by weight, of chloride ions to total concrete constituents.
6. Water-reducing admixtures: ASTM C494, Type A.
7. High-range, water-reducing admixture (superplasticizer):

    a. ASTM C494, Type F or G.
    b. Use shall not change requirements for:

        1) Maximum water/cement ratios.
        2) Concrete strength.
        3) Air content of placed concrete.
        4) Minimum cement content.

8. Non-corrosive, non-chloride accelerator:

    a. ASTM C494, Type C or E.
    b. Acceptable manufacturers are:

        1) "Accelguard 80," Euclid Chemical Co.
        2) "Polarset," W.R. Grace.
        3) "Pozzolith NC 534" or "Pozzutec 20," Master Builders.

    c. Admixture manufacturer must have long-term non-corrosive test data from an independent testing laboratory (of at least a year's duration) using an acceptable accelerated corrosion test method such as that using electrical potential measures.

E. Fibrous Reinforcement:

1. Polypropylene fibers for plastic shrinkage control of concrete members.
2. Acceptable materials:

    a. "Forta," Forta Corporation.
    b. "Fibermesh," Fibermesh, Inc.
    c. "Grace Fibers" or "Grace Microfibers," W.R. Grace & Co., Inc.
    d. "Durafiber," Durafiber, Inc.
    e. "Fiberstrand 100," Euclid Chemical Company.

3. Additional requirements:

    a. Collated fibrillated materials: Dosage rate 1.5 lb. per cu yd of concrete minimum containing at least 3 million individual fibers.
    b. Multifilament fibers: Dosage rate 1 lb. per cu yd of concrete minimum, containing at least 50 million individual fibers. Minimum length 0.75 in.

©2016, Walker Parking Consultants/Engineers, Inc. All rights reserved.

c. Meet requirements of ASTM C 1116, "Standard Specification for Fiber-Reinforced Concrete and Shotcrete," Designation Type III, 4.1.3.
d. Meet minimum plastic shrinkage crack reduction of 70% when tested in accordance with ICBO ES, Appendix B (7-92).

4. Use shall not change water requirement of mix.
5. Conform to manufacturer's recommendations for amount of fiber.
6. See Drawings for locations of use.
7. Fiber manufacturer or approved distributor: Provide services of qualified person at preconstruction meeting, preconcrete meeting and at first fibrous reinforced concrete placement.

F. Storage of Materials (ACI 301, 4.1.4).

2.2 CONCRETE MIX DESIGN (ACI 318, CHAPTER 4)

A. Selection of concrete proportions shall be in accordance with ACI 301, 4.2.3. Before any concrete is placed for project, Contractor shall submit to Engineer/Architect data showing method used for determining proposed concrete mix design, including fine and coarse aggregate gradations, proportions of all ingredients, water-cementitious material ratio, slump, air content, cylinder breaks and other required data specified in Article "Submittals," second paragraph for each different concrete type specified. Mix design shall meet following minimum requirements:

Compressive Strength (28 days)	6,000 psi
Water/(cement + silica fume) ratio	0.35 to 0.40
Microsilica content	7.5% by wt. of cement
Slump (maximum)*	6 in.
Cement content	610 lb/cu yd
Maximum size of aggregate	0.75 in.
Air content	7.5% ± 2%

* For consolidation with vibratory screeds, concrete slump at point of placement shall be limited to 4 in. maximum.

B. When desired mix properties are achieved, two 12 in. x 12 in. x 4 in. slabs shall be prepared for each mix design drilling four 4 in. diameter cores. Drilled cores shall be tested for rapid chloride permeability in accordance with Test Method ASTM C1202. Slab shall be moist cured for 28 days and cores removed and kept at 50% relative humidity until testing at 35 to 42 days. Concrete mix design submitted shall have average chloride permeability result of less than 800 coulombs for four cores tested, with no single test result exceeding 1000 coulombs.

C. Chloride Ion Level: See Article "Materials," paragraph "Chloride Ion Level."

D. Target Value for Air Entrainment:

1. Hardened concrete shall have air void system spacing factor of 0.0080 in. maximum as determined by ASTM C457. For concrete with higher than 0.0080 in. spacing factor, additional laboratory test data acceptable to Engineer/Architect

©2016, Walker Parking Consultants/Engineers, Inc. All rights reserved.

must be provided to verify that concrete mixture is durable for intended use when subjected to freezing and thawing.

E. All concrete containing high-range water-reducing admixture (superplasticizer) shall have 6 in. maximum placement slump with range 4.5 in. ± 1-1/2 in. Concrete shall arrive at job site at 4 in. maximum slump, be verified, then high-range water-reducing admixture added to increase slump to approved level for placement.

1. Before permission for plant addition of superplasticizer to be granted by Engineer/Architect, fulfill following requirements:

a. Submit letter from testing laboratory which developed original mix design(s), for each superplasticized mix design, certifying volume of mix water which will produce specified slump and water/cement ratio, taking into account aggregate moisture content.
b. Submit plant computer printout of mix contents for each truckload of superplasticized concrete with delivery of that truckload. Mix water volume greater than that certified shall be cause for concrete rejection.
c. Over retarding or crusting of flatwork surface shall be cause for concrete rejection and/or concrete placement to be halted.
d. Segregation or too short superplasticizer life due to underdosing shall be cause for concrete rejection.

F. Bonding grout shall consist of sand, cement, and microsilica in proportions similar to mortar in concrete to form stiff slurry. Consistency shall be such that it can be applied to old concrete in thin, even coat using stiff broom or brush without running or puddling.

2.3 PREBAGGED SILICA MODIFIED CONCRETE

A. The following product is an approved prebagged silica modified concrete:

“MS-S10” by King Packaged Materials Company, Burlington, Ontario. 800-461-0566

Or Engineer approved equivalent.

PART 3 - EXECUTION

3.1 PRODUCTION OF CONCRETE (ACI 301, 4.3.1)

A. Concrete shall be produced by on-site volumetric batching or ready-mixed concrete batched at Contractor's option.

©2016, Walker Parking Consultants/Engineers, Inc. All rights reserved.

B. Proportioning and Mixing Equipment:

1. Silica modified concrete, mixed at site, shall be proportioned by continuous mixer used in conjunction with volumetric proportioning. Volumetric batching/continuous mixers shall conform to ASTM C685. In addition, self-contained mobile, continuous type mixing equipment shall comply with following:

   a. Mixer shall be capable of producing batches of not less than 6 cu yd.
   b. Mixer shall be capable of positive measurement of cement being introduced into mix. Recording meter visible at all times and equipped with ticket printout shall indicate this quantity.
   c. Mixer shall provide positive control of flow of water into mixing chamber. Water flow shall be indicated by flowmeter and shall be readily adjustable to provide for minor variations in aggregate moisture.
   d. Mixer shall be capable of being calibrated to automatically proportion and blend all components of indicated composition on continuous or intermittent basis, as required by finishing operation, and shall discharge mixed material through conventional chute into transporting device or directly in front of finishing machine. Sufficient mixing capacity or mixers shall be provided to permit intended pour to be placed without interruption.
   e. Mixer shall be calibrated to accurately proportion specified mix. Yield is required to be within tolerance of 1.0%.

C. At Contractor's option, silica modified concrete may be ready-mixed concrete batched, mixed and transported in accordance with ASTM C94. In addition, following requirements shall also apply:

1. Volume of concrete in truck mixer shall not exceed 63% of total volume of drum.
2. No water shall be added to concrete batch at site. Addition of high-range water reducers (superplasticizer) at site shall be as directed by concrete manufacturer and approved by microsilica manufacturer. Truck shall be equipped with admixture dispenser or other auxiliary dispensing equipment, capable of adjustment for variation of dosage, calibration and accurate measurement.
3. Sequence and method of charging mixer shall be as recommended and approved by microsilica manufacturer. Engineer/Architect may request mixer evaluation as specified in ASTM C94 to verify uniformity of concrete mix.
4. Comply with discharge requirements stated in Article "Transportation and Discharge." If concrete consistently meets requirements of specification, Engineer/Architect may extend discharge time to comply with requirements of ASTM C94.

D. Placing and Finishing Equipment:

1. Placing and finishing equipment shall include adequate mechanized and hand tools for placement of plastic concrete and for working down to approximately correct grade for striking off with vibrating screed.

©2016, Walker Parking Consultants/Engineers, Inc. All rights reserved.

3.2 PREPARATION

A. Cavity surfaces shall be clean and dry prior to commencement of overlay installation. Preparation of surfaces to receive new concrete shall be in accordance with Section "Surface Preparation for Patching."

B. Bonding Grout:

1. Bonding grout shall be applied to damp (but not saturated) concrete surfaces and cavities on floor. Slurry shall be applied to all surfaces to receive overlay. Apply grout evenly to uniform thickness 0.0625 in. to 0.125 in. throughout. Grout shall not be allowed to dry or dust prior to placement of overlay material.
2. If overlayment is delayed and coat of grout dries, surface shall not be patched until it has been recleaned and prepared as specified in Section "Surface Preparation for Patching." Grout shall not be applied to more surface area than can be overlaid within 0.5 hr by available manpower.

C. Receive Owner's and Engineer/Architect's written approval of concrete surface finish used on flatwork before beginning construction.

3.3 INSTALLATION

A. Placing (ACI 301, 5.3.2):

1. Do not place concrete when temperature of surrounding concrete or air is less than 50° F. unless following conditions are met:

   a. Place concrete only when temperature of surrounding air is expected to be above 40° F. and rising and expected to be above 45° F. for at least 36 hours.
   b. When above conditions are not met, concrete may be placed only if insulation or heating enclosures are provided in accordance with ACI 306, "Recommended Practice for Cold Weather Concreting." Submit proposed protective measures in writing for Engineer/Architect's review prior to concrete placement.
   c. Costs for precautionary measures required shall be borne by Contractor.

2. For hot weather concrete placements, the following conditions shall apply:

   a. Do not place concrete if mix temperature exceeds 90° F.
   b. Do not place concrete under hot weather conditions. Hot weather is defined as air temperature which exceeds 80º F. or any combination of high temperature, low humidity and high wind velocity which causes evaporation rate in excess of 0.10 lb per sq ft per hr as determined by ACI 305R, Figure 2.1.5.

3. Concrete shall be manipulated and struck off slightly above final grade. Concrete shall then be consolidated and finished to final grade with internal and surface vibration devices. Proposed consolidation method used shall be submitted for Engineer/Architect's review prior to concrete placement.

©2016, Walker Parking Consultants/Engineers, Inc. All rights reserved.

4. Fresh concrete 3 in. or more in thickness shall be vibrated internally in addition to surface vibration.
5. For overlays, vibrating device shall consist of vibrating screeds meeting following requirements:

    a. Placing and finishing equipment shall not exceed maximum weight of 6,000 lb or 3,000 lb per axle.
    b. Screed shall be designed to consolidate concrete to 98% of unit weight determined in Article "Concrete Mix Design," first paragraph in accordance with ASTM C138. Sufficient number of identical vibrators shall be effectively installed such that at least one vibrator is provided for each 5 ft of screed length.
    c. Bottom face of screeds shall not be less than 4 in. wide and shall be metal covered with turned up or rounded leading edge to minimize tearing of surface of plastic concrete.
    d. Screed shall be capable of forward and reverse movement under positive control. Screed shall be provided with positive control of vertical position and angle of tilt.
    e. Screed shall be capable of vibrating at controlled rate, adjustable to between 3,000 to 6,000 vpm.

6. Concrete shall be deposited as close to its final position as possible. All concrete shall be placed in continuous operation and terminated only at bulkheads or designated control or construction joints.
7. On ramps with greater than 5% slope, all concreting shall begin at low point and end at high point. Contractor shall make any necessary adjustment to slump or equipment to provide wearing surface without any irregularities or roughness.

B. Finishing (ACI 301, 5.3.3 & 5.3.4):

1. Flatwork (Broom Finish ACI 301, 5.3.4.2d):

    a. All flatwork finishers shall hold current ACI Concrete Flatwork Finishers certification.
    b. Contractor shall adequately protect concrete surfaces after concrete placement and between initial and final finishing operations to minimize moisture loss from surface by misting and use of approved evaporation retardant. Protection materials and equipment must be in place, ready to use, prior to beginning of placement.

        1) No spraying of water directly on flatwork will be allowed. Fogging is not to be used to lubricate surface for finishing purposes.
        2) Fogging shall continue after finishing operation until covered by wet burlap cure.

    c. Screed and bullfloat surface of concrete to desired elevation.
    d. Immediately after bullfloating, give slab surfaces coarse transverse scored texture by drawing broom across surface. Texture shall be as approved by Owner and Engineer/Architect from sample panels.

©2016, Walker Parking Consultants/Engineers, Inc. All rights reserved.

e. Other finishing operations may be accepted by Owner and Engineer/Architect based on demonstration of procedures with sample panels.
f. Finishing tolerance: ACI 301, 5.3.4.2: Class B tolerance.
g. Before installation of overlay and after submittal, review, and approval of concrete mix design, Contractor shall fabricate two acceptable test panels simulating finishing techniques and final appearance to be expected and used on Project. Test panels shall be minimum of 200 sq ft in area and shall be reinforced and cast to thickness of typical wearing surface in Project. Test panels shall be cast from concrete supplied and batched in accordance with project Specifications. Intent of test panels is to simulate both high and low workability mixes, with approximate slump at time of casting of test panels to be 6 in. and 3 in., respectively. Contractor shall finish panels following requirements of items a, b, c, and e above, and shall adjust finishing techniques to duplicate appearance of concrete surface of each panel. Finished panels (one or both) may be rejected by Owner or Engineer/Architect, in which case Contractor shall repeat procedure on rejected panel(s) until Owner or Engineer/Architect acceptance is obtained. Accepted test panels shall be cured in accordance with Specifications and may be incorporated into Project. Accepted test panels shall serve as basis for acceptance/rejection of final finished surfaces of all flatwork.
h. Finish all concrete slabs to proper elevations to insure that all surface moisture will drain freely to floor drains, and that no puddle areas exist. Contractor shall bear cost of any corrections to provide for positive drainage.

C. Joints in Concrete (ACI 301, 5.3):

1. Construction, control and isolation joints are located and detailed on Drawings:

a. Tool joints at time of finishing. Sawcut joints are prohibited.
b. Isolation joints - interrupt structural continuity resulting from bond, reinforcement or keyway.

D. Curing:

1. Microsilica concrete shall be cured in accordance with Section "Cast-in-Place Concrete." In addition, following requirements shall also apply:

a. Surface shall be covered with single layer of clean, wet burlap as soon as surface will support it without deformation. Cover burlap with continuous single thickness of 4 mil polyethylene film. Maintain burlap in moist condition for 7 days.
b. Curing time shall be extended, as Engineer/Architect directs, when curing temperature falls below 50° F.
c. Curing compounds are prohibited.
d. Protect microsilica concrete from surface drying and plastic shrinkage by:

1) Continuous water fogging over slab area between finishing operations as outlined in Article "Installation," paragraph "Finishing."

©2016, Walker Parking Consultants/Engineers, Inc. All rights reserved.

2) Use of evaporative retardants immediately after screeding in accordance with manufacturer's recommendations.

E. Repair of Surface Defects (ACI 301, 5.3.7):

1. Repair all defects exceeding 0.25 in. width or depth.
2. Match color of concrete to be repaired.
3. Submit samples of materials and relevant literature and test data on proprietary compounds used for adhesion or patching ingredients to Engineer/Architect for his review before patching concrete.
4. Receive written approval of Engineer/Architect of method and materials prior to making repairs to concrete.

3.4 FIELD QUALITY CONTROL BY TESTING AGENCY (ACI 301, 1.6)

A. Air Content:

1. Sample freshly-mixed concrete per ASTM C172 and conduct one air content test per ASTM C231 or ASTM C173 for each truck of ready-mix, air-entrained concrete delivered to Project. For concrete produced on site by volumetric batching and continuous mixing, air content test shall be conducted for every 10 cu. yd. of concrete produced.
2. Sample fresh concrete immediately following placement and screeding and conduct air content tests per ASTM C231 or ASTM C173 at rate of one per every 10 truck loads of ready-mix, air-entrained concrete delivered to Project. For concrete produced on site by volumetric batching and continuous mixing, air content test shall be performed for every 100 cu. yds. of concrete produced.
3. Core and test hardened concrete topping for air content per ASTM C457 at rate of one core per 15,000 sq ft of topping or structural slab, unless directed otherwise by Engineer/Architect.
4. If concrete consistently meets requirements of this Specification and concrete mix design and placement procedures remain unchanged, Engineer/Architect may waive requirement for testing of hardened concrete.
5. Contractor shall patch holes resulting from concrete coring. Use patching materials which meet requirements of this Specification.

B. Compressive Strength:

1. Mold test cylinders in accordance with ASTM C31 and test in accordance with ASTM C31 as follows:

   a. Take minimum of 6 cylinders for each 30 cu yds, or fraction thereof, of each mix design of concrete placed in any 1 day. Use of 4 in. x 8 in. cylinders in lieu of standard cylinders is acceptable.
   b. Additional 2 cylinders shall be taken under conditions of cold weather concreting, and when directed by Engineer/Architect.

2. Sample plastic concrete for testing, at point where it is finally placed, in accordance with ASTM C172-82. Prior to placement, Engineer/Architect will

©2016, Walker Parking Consultants/Engineers, Inc. All rights reserved.

select sampling locations which may include points where plastic concrete has already been screeded and floated.

3. Cover specimens properly, immediately after finishing. Protect outside surfaces of cardboard molds, if used, from contact with sources of water for first 24 hours after molding.
4. Cure test cylinders per ASTM C31 as follows:

    a. To verify compressive strength of test cylinders required due to cold weather concreting conditions:

        1) Store test specimens on structure as near to point of sampling as possible and protect from elements in same manner as that given to portion of structure as specimen represents.
        2) Transport to test laboratory no more than 4 hours before testing. Remove molds from specimens immediately before testing.

    b. To verify 28-day compressive strength:

        1) During first 24 hours after molding, store test specimens under conditions that maintain temperature immediately adjacent to specimens in range of 60 to 80° F. and prevent loss of moisture from specimens.
        2) Remove test specimens from molds at end of 20 ± 4 hours and store in moist condition at 73.4 ± 3 F. until moment of test. Laboratory moist rooms shall meet requirements of ASTM C511.

5. Compression tests:

    a. Test 2 cylinders at 7 days.
    b. Test 2 cylinders at 28 days.
    c. Hold 2 cylinders in reserve for use as Engineer/Architect directs.

6. Unless notified by Engineer/Architect, reserve cylinders may be discarded without being tested after 56 days.

C. Slump Test:

1. Conduct one slump test in accordance with ASTM C143 per truck load or 10 cu yd of concrete delivered to Project.
2. When high-range water-reducing admixture (superplasticizer) is added at job site, initial slump must be verified by Testing Agency.

D. Chloride Permeability:

1. Mold two 4 in. diameter cylinders for every 20,000 sq ft of overlay, unless directed otherwise by Engineer/Architect. Mold cylinders in accordance with ASTM C31.
2. Cylinders shall be cured and tested in accordance with requirements stated in Article "Concrete Mix Design" and results reported to Engineer/Architect.

©2016, Walker Parking Consultants/Engineers, Inc. All rights reserved.

E. Yield and Proportioning Tests (ASTM C685):

1. When concrete placements involve more than 100 cu yds, accuracy of on-site batching equipment output indicators shall be verified at 50 cu yd intervals.
2. Accuracy of on-site batching equipment proportioning of concrete mixture shall be verified at 100 cu yd intervals.

F. Evaluation and Acceptance of Concrete (ACI 301, 1.7 and ACI 318, Article 4.7):

1. Concrete compression tests will be evaluated by Engineer/Architect in accordance with ACI 301, 1.7. If number of tests conducted is inadequate for evaluation of concrete or test results for any type of concrete fail to meet specified strength requirements, core tests may be required as directed by Engineer/Architect. Air content and parameters of air-void system shall meet requirements of this Section.
2. Core tests, when required, per ACI 301, Article 1.7.4.2.
3. Should tested hardened concrete meet these specifications, Owner will pay for coring and testing of hardened concrete. Should tested hardened concrete not meet these specifications, concrete contractor will pay for coring and testing of hardened concrete and for any corrective action required for unaccepted concrete.

G. Acceptance of Structure (ACI 301, 1.7):

1. Acceptance of completed concrete Work will be according to provisions of ACI 301, 1.7.
2. Patched and overlaid areas shall be sounded by Contractor with chain drag after 7 days cure and any hollowness detected shall be corrected by removing and replacing unsound areas at no extra cost to Owner.
3. If plastic or early drying shrinkage cracks appear in overlay within first 72 hours of curing period, overlay shall be considered defective. Contractor will remove and replace defective overlay at no extra cost.
4. Concrete rejected due to entrained air content below specified limit will be accepted if any of following conditions are met:

   a. ASTM C457: Three concrete specimens tested in accordance with ASTM C457 meet air void parameters of Article "Concrete Mix Design," paragraph "Target Value for Air Entrainment" (spacing factor of 0.008 in. and specific surface area of 600 in^2 per cu in. of air void volume).
   b. ASTM C457: Three concrete specimens tested in accordance with ASTM C457 meet air void parameters of concrete reported in Article "Submittals," paragraph "Freeze-thaw resistance."
   c. ASTM C666: Test 3 concrete specimens removed from structure.

END OF SECTION 03730

© Copyright 2016. All rights reserved. No part of this document may be reproduced in any form or by any means without permission from Walker Parking Consultants/Engineers, Inc.

©2016, Walker Parking Consultants/Engineers, Inc. All rights reserved.

SILICA MODIFIED CONCRETE MIX DESIGN SUBMITTAL FORM
(Submit separate form for each mix design)

Project: _____ City: _____

General Contractor: _____

Mix Design No.: _____ Concrete Grade: _____

Use (Describe)[1]: _____

MIX DESIGN PREPARATION:
Based on Standard Deviation Analysis: ___ or Trial Mix Test Data: __

Design Characteristics - Density: _____pcf; Strength: _____ psi (28 day);

Slump ___ in. BEFORE adding superplasticizer

Slump ___ in. AFTER adding superplasticizer

Air: ___ %

Materials:
Aggregates: (size; type; source; gradation; specification)

Coarse: _____

Fine: _____

Other Materials:	Type	Product-Manufacturer (Source)
Cement:	_____	_____
Flyash:	_____	_____
Silica Fume:	_____	_____
Other:	_____	_____

Admixtures:
Water Reducer: _____

W A L K E R A C C E P T A N C E S T A M P:

©2016, Walker Parking Consultants/Engineers, Inc. All rights reserved.

SILICA MODIFIED CONCRETE MIX DESIGN SUBMITTAL FORM
(Submit separate form for each mix design)

Air Entraining Agent: _____

High-Range Water-Reducing Admixture (HRWR) (superplasticizer): _____

Non-Corrosive Accelerator: _____

Other: _____

B. FINAL MIX DESIGN DATA:

RATIOS

Water[3] (Cementitious Material) lb. = _____
lb. = _____

Fine Agg. lb. = _____

Total Agg. lb. = _____%

SPECIFIC GRAVITIES

Fine Agg. _____
Coarse Agg. _____
Other _____

ADMIXTURES

HRWR ___ oz. per 100# cement

Non-Corrosive Accelerator ___ oz. per 100# cement

W.R. ___ oz. per 100# cement

A.E.A. ___ oz. per 100# cement

___ oz. per 100# cement

MIX PROPORTIONS[2]

	WEIGHT (lbs)	ABSOLUTE VOL. (cu ft)
cement:	_____	_____
fine[4] aggregate:	_____	_____
coarse[4] aggregate:	_____	_____
water:	_____	_____
entrained air:	_____	_____
other:	_____	_____
TOTALS:	_____	_____

[1] Footings, interior flatwork, columns, etc.
[2] Proportions per cubic yard.
[3] Includes free water contained on aggregates.
[4] Saturated surface dry weights.

PLASTIC CONCRETE
Initial Slump = ____ in.
Final Slump = ____ in.
Unit Wet Wt. = ____ pcf

Air Content = ____ %
Unit Dry Wt.= ____ pcf

©2016, Walker Parking Consultants/Engineers, Inc. All rights reserved.

SILICA MODIFIED CONCRETE MIX DESIGN SUBMITTAL FORM
(Submit separate form for each mix design)

STANDARD DEVIATION ANALYSIS (FROM EXPERIENCE RECORDS):

Number of Test Cylinders Evaluated: ____ Standard Deviation: _____

f'cr = f'c + 1.34s or f'cr = f'c + 2.33s - 500
(Refer to ACI 301 for increased deviation factor when less than 30 tests are available.)

Mix # _____

Job Name _____

TRIAL MIXTURE TEST DATA:

Age (days)	Mix #1 (comp. str.)	Mix #2 (comp. str.)	Mix #3 (comp. str.)
7	_____	_____	_____
7	_____	_____	_____
28	_____	_____	_____
28	_____	_____	_____

28 day average compressive strength: ___ psi

Slump = _____ in. Air Content = _____ %

Unit Wet Wt. = _____ pcf Unit Dry Wt.= _____ pcf

Mix Design Proportioned to Achieve: f'c + ___ psi = ____ psi
(1200 psi increases to 1400 psi when f'c > 5000 psi)

Initial Slump = ___ in., Final Slump = ____ in., Air Content = ___%

Unit Wet Wt. = ___ pcf, Unit Dry Wt.= ____ pcf

Water Soluble Chloride Ion Content: _____
Test Method: _____

Shrinkage (Length Change, Average)

_____% @ 4 days _____% @ 7 days
_____% @ 14 days _____% @ 21 days
_____% @ 28 days

©2016, Walker Parking Consultants/Engineers, Inc. All rights reserved.

SILICA MODIFIED CONCRETE MIX DESIGN SUBMITTAL FORM
(Submit separate form for each mix design)

Rapid Chloride Permeability Results:

_____ Coulombs @ ___ days
_____ Coulombs @ ___ days
_____ Coulombs @ ___ days
_____ Coulombs @ ___ days

Average _____ Coulombs

ASTM C457 Results _____

Remarks:
_____
_____

Main Plant Location _____

Miles From Project _____
Estimated Transit Time _____

Secondary or Backup Plant Location _____

Miles From Project _____
Estimated Transit Time_____

NOTE: Fill in all blank spaces. Use -0- (Zero) or N.A. (Not Applicable) where appropriate. See "Design and Control of Concrete Mixtures:, 13th Edition, by Portland Cement Association, for assistance in completing this form.

Mix # _____

Job Name _____

©2016, Walker Parking Consultants/Engineers, Inc. All rights reserved.

SILICA MODIFIED CONCRETE MIX DESIGN SUBMITTAL FORM
(Submit separate form for each mix design)

Attach letter of certification that all admixtures, including silica fume, are compatible for this mix design.

Submitted by:
Ready-Mix Supplier: Name _____

Address _____

_____

Phone Number _____

Date _____

Silica Fume Manufacturer:
Name _____

Address _____

_____

Phone Number _____

Date _____

Mix # _____

Job Name _____

© Copyright 2016. All rights reserved. No part of this document may be reproduced in any form or by any means without permission from Walker Parking Consultants/Engineers, Inc.

©2016, Walker Parking Consultants/Engineers, Inc. All rights reserved.

SECTION 07100 - WATERPROOFING SYSTEM

PART 1 - GENERAL

1.1 RELATED DOCUMENTS

A. Drawings and general provisions of Contract, including General and Supplementary Conditions and Division 01 Specification Sections apply to this Section.

1.2 SUMMARY

A. Single installer shall be responsible for providing complete sealant and waterproofing system designed to minimize occurrence of common sealant, waterproofing, and concrete deterioration problems. All measures called for in these Specifications will be rigorously enforced.

B. This Section includes the following:

1. Traffic topping: Fluid applied, waterproofing, traffic-bearing elastomeric membrane with integral wearing surface, where surface to which membrane to be applied is one or more of:

   a. Over floor repair area.
   b. As indicated on the plans.

2. Concrete control and construction joint sealant system in these surfaces:

   a. Supported concrete floor surfaces including curbs, walks, islands and pour strips and around the perimeter of all floor drains.
   b. Concrete stair landings.
   c. Slab-on-grade within parking facility, including curbs, walks, and islands and around the perimeter of all floor drains.

C. Materials shall be compatible with materials or related Work with which they come into contact, and with materials covered by this Section.

D. Related Sections: Following Sections contain requirements that relate to this Section.

1. Division 07 Section, “Expansion Joint Assembly.”
2. Division 09 Section, "Pavement Markings."

1.3 SUBMITTALS, GENERAL

A. Make submittals in accordance with requirements of Division 01 and as specified in this Section.

©2016, Walker Parking Consultants/Engineers, Inc. All rights reserved.

B. Section "Waterproofing System" contractor's experience record for past 5 years.

1. Experience shall include verification of 5 years experience with submitted system.
2. Information shall be included with bid submission.

C. Superintendent qualifications.

1. List Superintendent’s specific training/qualification.

D. Evidence of applicator's being certified by manufacturer. Evidence shall include complete copy of manufacturer’s licensing/certification document, spelling out repair responsibility for warranty claims.

E. Reviewed Shop Drawings distributed to all others whose Work is related.

F. Manufacturer shall submit a resume of minimum 20 independently verified projects completed with submitted system, to include:

1. Name and location of project.
2. Type of system applied.
3. On-Site contact with phone number.

G. Certification that products and installation comply with applicable federal, state of Iowa, and local EPA, OSHA and VOC requirements regarding health and safety hazards.

H. Five copies of snow removal guidelines for areas covered by guarantee.

I. Two copies each of manufacturer's technical representative's log for each visit.

J. Signed statement from this Section applicator certifying that applicator has read, understood, and shall comply with all requirements of this Section.

K. Submit 3 copies of System Maintenance Manual.

1.4 SUBMITTALS, TRAFFIC TOPPING

A. Written computations to Engineer/Architect of material quantities (by components) to be applied to concrete surface at least 60 days before application of traffic topping.

B. Proposed method of preparation of concrete surface.

C. Proposed method and details for treatment of cracks and other defects on concrete surface.

D. Product samples: One 12 in. by 12 in. stepped sample showing each component for each duty grade to be applied.

©2016, Walker Parking Consultants/Engineers, Inc. All rights reserved.

E. Quality Control Procedures: System manufacturer shall submit written quality control plan to Engineer/Architect for acceptance 1 month prior to construction for application procedures which specifically address following:

1. Surface preparation acceptance criteria.
2. Crack Detailing Recommendations.
3. Method of application of coats.
4. Primer type and application rate.
5. For all coats, wet mils required to obtain specified dry thickness. System dry mil thickness excluding aggregate.
6. Number and type of coats.
7. Quality control plan for assured specified uniform membrane thickness that utilizes grid system of sufficiently small size to designate coverage area of not more than 5 gallons at specified thickness. In addition, employ wet mil gauge to continuously monitor thickness during application. Average specified wet mil thickness shall be maintained within grid during application with minimum thickness of not less than 80% of average acceptable thickness. Immediately apply more material to any area not maintaining these standards.
8. Type, gradation and aggregate loading required within each coat.
9. Maximum and minimum allowable times between coats.
10. Temperature, humidity and other weather constraints. Specify substrate moisture testing criteria.
11. Final cure time before resumption of parking and/or paint striping.
12. Any other special instructions required to ensure proper installation.
13. Quality Service Requirements:

    a. Show evidence of nationwide vendor and licensed/approved applicator network. List of names, addresses and phone numbers, with copies of certification/approval agreement with each, satisfies requirement. Licensing/certification agreement shall include following information:

        1) Applicator’s financial responsibility for warranty burden under agreement terms.
        2) Manufacturer’s financial responsibility for warranty burden under agreement terms.
        3) Process for dispute settlement between manufacturer and applicator in case of system failures where cause is not evident or cannot be assigned.
        4) Authorized signatures for both Applicator Company and Manufacturer.
        5) Commencement date of agreement and expiration date (if applicable).

    b. Provide copies of manufacturing statistical process control charts for current month.
    c. Provide copy of field application quality control procedures.
    d. Show evidence of minimum 10 projects completed by applicator over previous 5 years using submitted system.

14. Flash point of each component 200º F. maximum.

©2016, Walker Parking Consultants/Engineers, Inc. All rights reserved.

15. Static coefficient of friction shall meet minimum requirements of Americans with Disabilities Act (ADA).
16. Provide certificate stating materials have been tested and listed for UL 790 Class "A" rated materials/system by UL for traffic topping application specified on project. Containers shall bear UL labels.
17. Written certification from traffic topping manufacturer confirming compatibility with existing underlying coatings and/or substrate.
18. Written acceptance by traffic topping manufacturer of existing coatings and/or substrate for application of new traffic topping system.

1.5 SUBMITTALS, CONCRETE CONTROL AND CONSTRUCTION JOINT SEALANT SYSTEM

A. Material samples.

B. Installation plans and large scale details.

C. Any other information necessary to show placement of control joint system.

1.6 QUALITY ASSURANCE, GENERAL

A. Testing Agency: Independent testing laboratory employed by Owner and acceptable to Engineer/Architect.

B. General:

1. Provide a complete copy of licensing/certification document for each system manufacturer to Engineer/Architect that confirms system installer is a licensed/certified applicator for the manufacturer and is legally licensed to perform work in the state of Iowa.
2. Licensing/certification agreement must provide following information:

    a. Applicator’s financial responsibility for warranty burden under agreement terms.
    b. Manufacturer’s financial responsibility for warranty burden under agreement terms.
    c. Process for dispute settlement between manufacturer and applicator in case of system failures where cause is not evident or cannot be assigned.
    d. Officers’ signatures for both Applicator Company and Manufacturer.
    e. Commencement date of agreement and expiration date (if applicable).

3. All Work under Section "Waterproofing System" shall be performed by organizations which have successfully performed at least 5 verifiable years of installations similar to those involved in this Contract, and minimum 10 projects with submitted system. In addition, system installer shall submit listing of 5 or more prior installations in climate and size similar to that for this Project.
4. Final selection of Section "Waterproofing System" installer shall be subject to acceptance of Engineer/Architect. Engineer/Architect retains right to reject any installer.

©2016, Walker Parking Consultants/Engineers, Inc. All rights reserved.

5. All Section "Waterproofing System" Work shall be under immediate control of person experienced in this type Work. Exercise close check and rigid control of all operations as necessary for full compliance with all requirements. Contractor's superintendent assigned to Project shall have supervised 5 prior projects of similar magnitude and design, and shall be present during all operations. Superintendent shall be acceptable to Engineer/Architect. Engineer/Architect retains right to remove superintendent from project if superintendent fails to ensure full compliance with Specification.
6. Information Statement: Annually Engineer/Architect evaluates manufacturer/applicator performance based on Owner satisfaction. Ratings of Below Expected Performance, At Expected Performance, and Above Expected Performance are assigned. Manufacturers/applicators receiving Below Expected Performance rating will be deleted from Specification for 1 year, minimum.

1.7 QUALITY ASSURANCE, TRAFFIC TOPPING

A. Manufacturer: Review concrete finish specification and confirm in writing to Engineer/Architect and General Contractor that finishes as specified are acceptable for system to be installed. Send to Engineer/Architect and General Contractor 1 month before placement of any concrete which will receive traffic topping.

B. Testing Agency employ wet mil gauge to periodically monitor thickness during application. See Submittals paragraph Traffic Topping, Quality Control Procedures, Quality Control Plan.

C. Manufacturer: Provide qualified representative on site for duration of Work.

D. Use trial sections under Installation/Application paragraph Traffic Topping, "Install 1 trial section..." to determine adequacy of pre-application surface cleaning. Obtain Owner, Engineer/Architect and manufacturer acceptance of cleaning before proceeding with topping application.

E. Determine overall topping system mil thickness:

1. Contractor shall provide 6 in. by 6 in. bond breaker (topping coupon) on concrete surface for each 25,000 sq ft, or fraction thereof, of topping to be placed as directed by Engineer/Architect and manufacturer. Dimensionally locate coupon for easy removal.
2. Contractor shall assist Testing Agency in removing topping coupons from concrete surface at completion of manufacturer-specified cure period. Contractor shall repair coupon area per topping manufacturer's instructions.
3. Testing Agency shall determine dry mil thickness of completed Traffic Topping System, including bond breaker. Take 9 readings (minimum), 3 by 3 pattern at 2 in. on center. No reading shall be taken closer than 1 in. from coupon edge. Report individual readings and overall topping system average to Engineer/Architect. Readings shall be made with micrometer or optical comparator.

F. Pre-installation Conference: Meet at project site well in advance of time scheduled for Work to proceed to review requirements for Work and conditions that could interfere

©2016, Walker Parking Consultants/Engineers, Inc. All rights reserved.

with successful topping performance. Require every party concerned with topping Work, or required to coordinate with it or protect it thereafter, to attend. Include manufacturer's technical representative and warranty officer.

G. Traffic Topping shall satisfy the current National Volatile Organic Compound (VOC) Emission Standards for Architectural Coatings.

1.8 QUALITY ASSURANCE, CONCRETE CONTROL AND CONSTRUCTION JOINT SEALANT SYSTEM

A. Review and approve joint details before construction.

B. Coordinate layout of joint system and approve methods for providing joints with precast concrete and concrete contractors.

C. Inspect site and precast plant before precast production to insure proper joint configuration.

D. Flood test joints where shown on Drawings.

E. Testing Agency:

1. Check shore hardness per ASTM standard specified in sealant manufacturer's printed data.
2. If flood test of joints required by this Section, report results to Engineer/Architect.

1.9 REFERENCES

A. American Society for Testing and Materials (ASTM):

1. ASTM C642, "Test for Specific Gravity, Absorption and Voids in Hardened Concrete."
2. ASTM D2240, "Test for Indentation Hardness of Rubber and Plastics by Means of a Durometer."
3. ASTM D6489-99, “Determining the Water Absorption of Hardened Concrete Treated with a Water Repellent Coating.”
4. ASTM E119, "Fire Tests of Building Construction and Materials."

1.10 DELIVERY, STORAGE, AND HANDLING

A. Deliver all materials to site in original, unopened containers, bearing following information:

1. Name of product.
2. Name of manufacturer.
3. Date of preparation.
4. Lot or batch number.

©2016, Walker Parking Consultants/Engineers, Inc. All rights reserved.

B. Store materials under cover and protect from weather. Replace packages or materials showing any signs of damage with new material at no additional cost to Owner.

C. Do not store material on slabs to be post-tensioned before final post-tensioning of slabs is accomplished. At no time shall weight of stored material being placed on slab area, after post-tensioning is completed and concrete has reached specified 28 day strength, exceed total design load of slab area. Between time final post-tensioning is accomplished and time concrete has reached specified 28 day strength, weight of stored material placed on slab area shall not exceed half total design load of slab area.

1.11 PROJECT CONDITIONS

A. Weather and Substrate Conditions for Sealers: Do not proceed with application (except with written recommendation of manufacturer) under any of the following conditions:

1. Ambient temperature is less than 40º F.
2. Substrate surfaces have cured for less than 1 month.
3. Rain or temperatures below 40º F predicted for a period of 24 hours.
4. Earlier than 24 hours after surfaces became wet.
5. Substrate is frozen or surface temperature is less than 40º F.
6. Windy condition such that repellent may be blown to vegetation or substrates not intended.

B. Weather and Substrate Conditions for Other Materials: Proceed with work only when existing and forecast weather and temperature of concrete substrate will permit work in accordance with manufacturer's recommendations.

1.12 WARRANTY

A. This article applies to all materials covered in Section "Waterproofing System" EXCEPT Concrete Sealer.

B. System Manufacturer: Furnish Owner with written total responsibility Joint and Several Warranty, detailing responsibilities of manufacturer and applicator with regard to warranty requirements (Joint and Several). The warranty shall provide that system will be free of defects, chemical damage related to system design, workmanship or material deficiency, consisting of:

1. Any adhesive or cohesive failures.
2. Spalling surfaces (applies to traffic topping only).
3. Weathering.
4. Surface crazing (does not apply to traffic topping protection course).
5. Abrasion or tear failure resulting from normal traffic use.

C. If material surface shows any of defects listed above, supply labor and material to repair all defective areas and to repaint all damaged line stripes.

D. Warranty period shall be a 5 year Joint and Several Warranty commencing with date of acceptance of work.

©2016, Walker Parking Consultants/Engineers, Inc. All rights reserved.

E. Perform any repair under this warranty at no cost to Owner.

F. Provide Engineer/Architect with sample of final Joint and Several Warranty including, but not limited, to the following: length of warranty, change in value of warranty – if any-based on length of remaining warranty period, transferability of warranty, responsibilities of each party, notification procedures, dispute resolution procedures, and limitations of liability for direct and consequential damages.

G. Provide Engineer/Architect with sample of Manufacturer's Licensing/Certification Agreement, detailing joint responsibilities of manufacturer and applicator with regard to warranty claim resolution.

H. Snowplows, vandalism, abnormally abrasive maintenance equipment, and studded snow tires are not normal traffic use and are exempted from warranty.

PART 2 - PRODUCTS

2.1 MANUFACTURERS

A. Manufacturer: Subject to compliance with requirements, provide products of 1 of following, only where specifically named in product category:

1. Advanced Chemical Technologies (ACT), Inc., Oklahoma City, OK.
2. BASF Building Systems (BASF), Shakopee, MN.
3. Carlisle Coating & Waterproofing(CCW), Inc., Sapulpa, OK.
4. Construction Specialties(C/S), Inc., Muncy, PA.
5. Deneef Construction Chemicals (deneef), Houston, TX.
6. Dow Corning Corp. (Dow Corning), Midland, MI.
7. Evonik Degussa Corporation (Degussa), Parsippany, NJ.
8. Larson Products, Corporation(Larson), Jessup, MD.
9. Lymtal International Inc. (Lymtal), Lake Orion, MI.
10. Neogard Division of Jones-Blair Company (Neogard), Dallas, TX.
11. Poly-Carb, Cleveland, OH.
12. Polycoat Products, A Division of American Polymers Corp. (Polycoat), Santa Fe Springs, CA.
13. Pecora Corporation (Pecora), Harleysville, PA.
14. ProSoCo, Inc. (ProSoCo), Lawrence, KS.
15. Sika Corporation (Sika), North Canton, OH.
16. Sonneborn, a Division of BASF Construction Chemicals (BASF).
17. Technical Barrier Systems, Inc. (TBS), Oakville, Ontario.
18. Tremco (Tremco), Cleveland, OH.

©2016, Walker Parking Consultants/Engineers, Inc. All rights reserved.

2.2 MATERIALS, TRAFFIC TOPPING

A. Acceptable low odor toppings are listed below. One will be selected as an alternate. In bid form, list bid price for each topping listed below. Contract for topping will not necessarily be directed to lowest bid priced topping. Toppings shall be compatible with all other materials in this Section and related work.

1. VOC Compliant, Extreme Low Odor, High-Solids (100%), Heavy Duty Coating System):

a. Vulkem 360NF/950NF and 951NF, Tremco.
b. AutoGard FC HD48, Neogard Division of Jones-Blair Company.
c. Iso-Flex 760 U HL AR and 760 U HL AL, Lymtal.
d. Conipur II, BASF Building System.
e. Flexodeck Mark 170.2, Poly-Carb.
f. Kelmar FCW III, exposure 2 or 3, TBS.

B. Recoating: Provide all components specified for new heavy-duty applications including waterproofing layer (basecoat), appropriate number of aggregate coats and separate wearing course.

C. Provide ultraviolet screening for all traffic topping placed on this project.

D. Finish top coat shall be colored grey.

E. Substitutions: **None** for this project. Contact Engineer/Architect for consideration for future projects.

1. Acceptable aggregates for traffic topping shall be:

a. “1630 Frac” by Badger Mining Corporation. Phone: 414.361.2388.
b. “16/30” by Texas Mining. Phone: 915.597.0721.
c. “Grade 4 Fractured Flint” by Flint Rock Products. Phone: 918.673.1749.
d. “#3 Q-ROK” by U.S. Silica Company. Phone: 304.258.2500.

2.3 MATERIALS, CONCRETE CONTROL AND CONSTRUCTION JOINT SEALANT SYSTEM

A. In addition to locations and extent of sealant shown on Drawings, provide sealant at following conditions:

1. At all control joints in slabs on grade, pour strips, (cast-in-place) slabs, topping, and in joints between pretopped precast double tee flanges.
2. Around perimeter of all floor drains.
3. At all exterior horizontal joints between precast and cast-in-place concrete. Color to match precast concrete.
4. At all vertical and horizontal joints between precast beams and columns at tiers exposed directly to weather. Color to match precast concrete.

©2016, Walker Parking Consultants/Engineers, Inc. All rights reserved.

B. Provide complete system of compatible materials designed by manufacturer to produce waterproof, traffic-bearing control joints as detailed on Drawings.

C. Compounds used for sealants shall not stain masonry or concrete. Aluminum pigmented compounds not acceptable.

D. Color of sealants shall match adjacent surfaces.

E. Closed cell or reticulated backer rods: Acceptable products:

1. “Sof Rod,” Nomaco Inc., 501 NMC Drive, Zebulon, NC 27597. (800) 345-7279 ext. 341.
2. “ITP Soft Type Backer Rod,” Industrial Thermo Polymers Limited, 2316 Delaware Ave., Suite 216, Buffalo, NY 14216. (800) 387-3847.
3. “Sonneborn Soft Type Backer Rod,” Sonneborn, Minneapolis, MN.

F. Bond breakers and fillers: as recommended by system manufacturer.

G. Primers: as recommended by sealant manufacturer, used in accordance with manufacturer's printed instructions.

H. Acceptable sealants are listed below. Sealants shall be compatible with all other materials in this Section and related work.

I. Acceptable polyurethane control joint sealants:

1. Sonolastic SL-2, BASF.
2. Iso-flex 880 GB, Lymtal.
3. Dynatrol II-SG or Urexpan NR 200, Pecora.
4. Sikaflex-2c SL, Sika.
5. THC-900/901, Vulkem 45SSL, or Vulkem 245, Tremco.

J. Acceptable polyurethane vertical and cove joints sealants:

1. Dow Corning NS parking structure sealant (non-sag), Dow Corning.
2. Sikaflex-2c NS, Sika.
3. Sonolastic NP-2, BASF.
4. Dymeric 240/240FC or THC 901 (cove only), Tremco.
5. Dynatred, Pecora.
6. Iso-flex 881, Lymtal.

K. Proposed Substitutions: **None** for this project. Contact Engineer/Architect for consideration for future projects.

©2016, Walker Parking Consultants/Engineers, Inc. All rights reserved.

PART 3 - EXECUTION

3.1 INSPECTION

A. Inspect surfaces to receive Work and report immediately in writing to Engineer/Architect any deficiencies in surface which render it unsuitable for proper execution of Work.

B. Coordinate and verify that related Work meets following requirements:

1. Concrete surfaces are finished as acceptable for system to be installed.
2. Curing compounds used on concrete surfaces are compatible with Work to be installed.
3. Concrete surfaces have completed proper curing period for system selected.
4. Joint Sealants are compatible with traffic toppings.

C. Acid etching: Prohibited.

D. All openings to occupied space shall be sealed to prevent cleaning materials, solvents and fumes from infiltration. All protective measures and/or ventilating systems required to prevent infiltration are incidental to this Work**.**

3.2 PREPARATION, TRAFFIC TOPPING

A. General Contractor: Correct unsatisfactory conditions in manner acceptable to traffic topping installer before installation. All high points, ridges, and other defects shall be corrected as acceptable to Engineer/Architect prior to installation of traffic topping.

B. Remove all laitance and surface contaminants, including oil, grease and dirt by shotblasting. Prepare by sandblasting all surfaces inaccessible to shotblast equipment.

C. Before applying materials, apply system to small area to assure that it will adhere to substrate and joint sealants and dry properly and to evaluate appearance.

D. A primer coat is required for all systems. No exception.

E. All cracks on concrete surface shall be prepared in accordance with manufacturer's recommendations.

F. All random cracks on concrete surface less than 0.03125 in. wide and showing no evidence of water and/or salt water staining on ceiling below shall receive detail coat unless more complete treatment required in accordance with manufacturer's recommendations. Rout and seal random cracks, construction joints and control joints prior to installation of primer or base coat.

G. Mask off adjoining surfaces not to receive traffic topping and mask off drains to prevent spillage and migration of liquid materials outside membrane area. Provide neat/straight lines at termination of traffic topping.

©2016, Walker Parking Consultants/Engineers, Inc. All rights reserved.

3.3 PREPARATION, CONCRETE CONTROL AND CONSTRUCTION JOINT SEALANT SYSTEM

A. General Contractor: Correct unsatisfactory conditions in manner acceptable to installer before installing sealant system.

B. Sealant Installer: Grind joint edges smooth and straight with beveled grinding wheel before sealing. All surfaces to receive sealant shall be dry and thoroughly cleaned of all loose particles, laitance, dirt, dust, oil, grease or other foreign matter. Obtain written approval of method from system manufacturer before beginning cleaning.

C. Check preparation of substrate for adhesion of sealant.

D. Prime and seal joints and protect as required until sealant is fully cured. A primer coat is required for all systems.

3.4 INSTALLATION/APPLICATION, GENERAL

A. Do all Work in strict accordance with manufacturer's written instructions and specifications including, but not limited to, moisture content of substrate, atmospheric conditions (including relative humidity and temperature), coverages, mil thicknesses and texture, and as shown on Drawings.

B. Manufacturer's technical representative, acceptable to Engineer/Architect, shall be on site during surface preparation and installation.

C. Cease material installation under adverse weather conditions, or when temperatures are outside manufacturer's recommended limitations for installation, or when temperature of work area or substrate are below 40ºF.

3.5 INSTALLATION/APPLICATION, TRAFFIC TOPPING

A. Refer to Submittals paragraph Traffic Topping, "Quality Control Procedures..." and Quality Assurance paragraph Traffic Topping.

B. Installation shall include all of following steps:

1. Surface Preparation – to prepare concrete for system application.
2. Crack Detail – for crack bridging.
3. Primer Coat – To insure proper adhesion of membrane to substrate.
4. Base Coat – to provide crack spanning in conjunction with Crack Detail noted above.
5. Aggregate Coat – to hold aggregate in system, providing skid and wear close up resistance.
6. Aggregate – Correct size, shape, hardness and amount necessary to insure proper skid and wear resistance.
7. Top Coat – to lock aggregate into place, provide a maintainable surface and provide resistance to ponding water, UV degradation, color loss and chemical intrusion.

©2016, Walker Parking Consultants/Engineers, Inc. All rights reserved.

C. Do not apply traffic topping material until concrete has been air dried at temperatures at or above 40° F. for at least 30 days after curing period specified.

D. Install 1 trial section of topping system for each duty grade recoat system specified. Do not proceed with further topping application until trial sections accepted in writing by Engineer/Architect. Remove and replace rejected trial sections with acceptable application. Trial section shall also be tested for:

1. Wet mil thickness application per manufacturer's literature and Submittals paragraph Traffic Topping, "Quality Control Procedures...."
2. Adhesion to concrete substrate and/or existing coating per manufacturer's printed test data.
3. Overall dry mil thickness per Quality Assurance paragraph Traffic Topping.

E. All adjacent vertical surfaces shall be coated with traffic topping minimum of 4 in. above coated horizontal surface. Requirement includes, but is not limited to pipes, columns, walls, curbs (full height of vertical faces of all curbs) and islands.

F. Complete all Work under this Section before painting line stripes.

3.6 INSTALLATION/APPLICATION, CONTROL AND CONSTRUCTION JOINT SEALANT SYSTEM

A. Completely fill joint without sagging or smearing onto adjacent surfaces.

B. Fill horizontal joints slightly recessed to avoid direct contact with wheel traffic.

C. Contractor and Engineer/Architect shall determine 1 of following 2 methods of sealant testing to verify sealant profile:

1. Contractor, at Engineer/Architect's direction, shall cut out lesser of 1% of total lineal footage placed or total of 100 lineal ft of joint sealant at isolated/random locations (varying from in. to ft of material) for Engineer/Architect and Manufacturer's Representative inspection of sealant profile.
2. Contractor, at Engineer/Architect's direction, shall install 3 trial joint sections of 20 ft each. Contractor shall cut out joint sections, as selected by Engineer/Architect, for Engineer/Architect and Manufacturer's Representative inspection. Additional isolated/random removals may be required where sealant appears deficient. Total cut out sealant shall not exceed lesser of 1% of total lineal footage placed or total of 100 lineal ft of joint sealant at isolated/random locations (varying from in. to ft of material) for Engineer/Architect and Manufacturer's Representative inspection of sealant profile.

D. Contractor to repair all random joint sealant "cut out" sections at no cost to Owner.

3.7 CLEANING

A. Clean off excess material and material smears adjacent to joints as work progresses using methods and materials approved by manufacturers.

©2016, Walker Parking Consultants/Engineers, Inc. All rights reserved.

END OF SECTION 07100

© Copyright 2016. All rights reserved. No part of this document may be reproduced in any form or by any means without permission from Walker Parking Consultants/Engineers, Inc.

SECTION 079233 –JOINT SEALANTS

PART 1 - GENERAL

1.1 RELATED DOCUMENTS

A. Drawings and general provisions of Contract, including General and Supplementary Conditions and Division 01 Specification Sections apply to this Section.

1.2 SUMMARY

A. This Section includes the following:

1. Exterior joints in the following horizontal/vertical non-traffic bearing surfaces:

   a. Joints at door and window perimeters between concrete masonry units, steel lintels, metal flashings or other substrate and glazing framing.
   b. Glazing joints between glass and frames.

1.3 ADMINISTRATIVE REQUIREMENTS

A. Coordination:

1. Materials shall be compatible with materials or related Work with which they come into contact, and with materials covered by this Section.
2. Distribute reviewed submittals to all others whose Work is related.
3. Coordinate layout of joint system and approve methods for providing joints with precast concrete and concrete contractors.
4. Inspect site and precast plant before precast production to insure proper joint configuration.

B. Make submittals in accordance with requirements of Division 01 Section, “Submittal Procedures:”

1. See requirements of Division 01 Section, “Submittal Procedures,” Part 1 heading, “Submittal Procedures,” for limits to resubmittals.

C. Submittals and Resubmittals: Engineer will review each of Contractor’s shop drawings and/or submittal data the initial time and, should resubmittal be required, one additional time to verify that reasons for resubmittal have been addressed by Contractor and corrections made. Resubmittal changes/revisions/corrections shall be circled. Engineer will review only circled items and will not be responsible for non-circled changes/revisions/corrections and additions. Should additional resubmittals be required, Contractor shall reimburse Owner for all costs incurred, including the cost of Engineer’s services made necessary to review such additional resubmittals. Owner shall in turn reimburse Engineer.

©2016, Walker Restoration Consultants. All rights reserved.

1.4 QUALITY ASSURANCE

A. Manufacturer's Qualifications: Owner retains right to reject any manufacturer.

1. Evidence of acceptable previous work on WALKER-designed projects. If none, so state.
2. Evidence of financial stability acceptable to Engineer/Architect.
3. Listing of 20 or more projects completed with submitted system, to include:

   a. Name and location of project.
   b. Type of system applied.
   c. On-Site contact with phone number.

B. Manufacturer's technical representative, acceptable to Engineer/Architect, shall be on site during surface preparation and initial stages of installation.

C. Installer's Qualifications: Owner retains right to reject any manufacturer.

1. Evidence of compliance with Summary article paragraph "A single installer. . ."
2. Evidence that installer has successfully performed or has qualified staff who have successfully performed at least 5 verifiable years of installations similar to those involved in this Contract, and minimum 10 projects with submitted system.
3. Listing of 5 or more installations in climate and size similar to this Project performed by installer's superintendent.

D. Testing Agency: Independent testing laboratory employed by Owner and acceptable to Engineer/Architect.

E. Certifications:

1. Licensing/certification document from system manufacturer that confirms system installer is a licensed/certified applicator for the manufacturer and is legally licensed to perform work in the State of South Dakota.
2. Licensing/certification agreement shall include following information:

   a. Applicator's financial responsibility for warranty burden under agreement terms.
   b. Manufacturer's financial responsibility for warranty burden under agreement terms.
   c. Process for dispute settlement between manufacturer and applicator in case of system failures where cause is not evident or cannot be assigned.
   d. Authorized signatures for both Applicator Company and Manufacturer.
   e. Commencement date of agreement and expiration date (if applicable).

1.5 DELIVERY, STORAGE, AND HANDLING

A. Deliver all materials to site in original, unopened containers, bearing following information:

1. Name of product.

©2016, Walker Restoration Consultants. All rights reserved.

2. Name of manufacturer.
3. Date of preparation.
4. Lot or batch number.

B. Store materials under cover and protect from weather. Replace packages or materials showing any signs of damage with new material at no additional cost to Owner.

C. Do not store material on slabs to be post-tensioned before final post-tensioning of slabs is accomplished. At no time shall weight of stored material being placed on slab area, after post-tensioning is completed and concrete has reached specified 28 day strength, exceed total design load of slab area. Between time final post-tensioning is accomplished and time concrete has reached specified 28 day strength, weight of stored material placed on slab area shall not exceed half total design load of slab area.

1.6 FIELD CONDITIONS

A. Weather and Substrate Conditions: Proceed with work only when existing and forecast weather and temperature of concrete substrate will permit work in accordance with manufacturer's recommendations.

1.7 WARRANTY

A. System Manufacturer: Furnish Owner with written total responsibility Joint and Several Warranty, detailing responsibilities of manufacturer and installer with regard to warranty requirements (Joint and Several). The warranty shall provide that system will be free of defects, water penetration and chemical damage related to system design, workmanship or material deficiency, consisting of:

1. Any adhesive or cohesive failures.
2. Weathering.
3. Abrasion or tear failure resulting from normal traffic use.

B. If material surface shows any of defects listed above, supply labor and material to repair all defective areas and to repaint all damaged line stripes.

C. Warranty period shall be a 5 year Joint and Several Warranty commencing with date of acceptance of work.

D. Perform any repair under this warranty at no cost to Owner.

E. Address the following in the terms of the Warranty: length of warranty, change in value of warranty – if any- based on length of remaining warranty period, transferability of warranty, responsibilities of each party, notification procedures, dispute resolution procedures, and limitations of liability for direct and consequential damages.

F. Snowplows, vandalism, and abnormally abrasive maintenance equipment are not normal traffic use and are exempted from warranty.

©2016, Walker Restoration Consultants. All rights reserved.

PART 2 - PRODUCTS

2.1 MANUFACTURERS

A. Manufacturer: Subject to compliance with requirements, provide products from the manufacturers where specifically named in a product category.

2.2 MATERIALS, JOINT SEALANT SYSTEM

A. Provide complete system of compatible materials designed by manufacturer to produce waterproof, traffic-bearing control joints as detailed on Drawings. Contractor shall consider the following in selection of materials:

1. Compatibility: Select glazing sealants that are compatible with one another and with other materials they will contact, including glass products, seals of insulating-glass units, and glazing channel substrates, under conditions of service and application, as demonstrated by sealant manufacturer based on testing and field experience.
2. Suitability: Comply with sealant and glass manufacturers' written instructions for selecting glazing sealants suitable for applications indicated and for conditions existing at time of installation.

B. Compounds used for sealants shall not stain masonry or concrete. Aluminum pigmented compounds not acceptable.

C. Color of sealants shall match adjacent surfaces. Selection shall be by Engineer.

D. Closed cell or reticulated backer rods: Acceptable products:

1. “Sof Rod,” Nomaco Inc., 501 NMC Drive, Zebulon, NC 27597. (800) 345-7279 ext. 341.
2. “ITP Soft Type Backer Rod,” Industrial Thermo Polymers Limited, 2316 Delaware Ave., Suite 216, Buffalo, NY 14216. (800) 387-3847.
3. “Sonneborn Soft Type Backer Rod,” Sonneborn, Minneapolis, MN.

E. Bond breakers and fillers: as recommended by system manufacturer.

F. Primers: as recommended by sealant manufacturer.

G. Acceptable sealants are listed below. Sealants shall be compatible with all other materials in this Section and related work.

1. Elastomeric Glazing Sealants: Comply with ASTM C 920 and other requirements indicated for each liquid-applied chemically curing sealant specified, including those referencing ASTM C 920 classifications for type, grade, class, and uses related to exposure and joint substrates.

   a. Dow Corning Corporation; 790.
   b. GE Silicones; SilPruf LM SCS2700.

©2016, Walker Restoration Consultants. All rights reserved.

c. Tremco; Spectrem 1 (Basic).
d. Or Approved Equivalent.

H. Proposed Substitutions: None for this project. Contact Engineer/Architect for consideration for future projects.

PART 3 - EXECUTION

3.1 EXAMINATION

A. Examine surfaces to receive Work and report immediately in writing to Engineer/Architect any deficiencies in surface which render it unsuitable for proper execution of Work.

B. Coordinate and verify that related Work meets following requirements before beginning installation

1. Substrates are finished as acceptable for system to be installed.
2. Curing compounds used on concrete surfaces are compatible with system to be installed.
3. Concrete surfaces have completed proper curing period for system selected.

3.2 PREPARATION

A. Seal all openings to occupied space to prevent cleaning materials, solvents and fumes from infiltration. All protective measures and/or ventilating systems required to prevent infiltration are incidental to this Work.

B. Correct unsatisfactory conditions before installing sealant system.

C. Acid etching is prohibited.

D. Grind joint edges smooth and straight with beveled grinding wheel before sealing. All surfaces to receive sealant shall be dry and thoroughly cleaned of all loose particles, laitance, dirt, dust, oil, grease or other foreign matter. Obtain written approval of method from system manufacturer before beginning cleaning.

E. Check preparation of substrate for adhesion of sealant.

F. Install continuous spacers, or spacers combined with cylindrical sealant backing, between glass lites and glazing stops to maintain glass face clearances and to prevent sealant from extruding into glass channel and blocking weep systems until sealants cure. Secure spacers or spacers and backings in place and in position to control depth of installed sealant relative to edge clearance for optimum sealant performance.

G. Prime and seal joints and protect as required until sealant is fully cured. A primer coat is required for all systems.

©2016, Walker Restoration Consultants. All rights reserved.

3.3 INSTALLATION/APPLICATION

A. Do all Work in strict accordance with manufacturer's written instructions and specifications including, but not limited to, moisture content of substrate, atmospheric conditions (including relative humidity and temperature), thicknesses and texture, and as shown on Drawings.

B. Completely fill joint without sagging or smearing onto adjacent surfaces. Force sealants into glazing channels to eliminate voids and to ensure complete wetting or bond of sealant to glass and channel surfaces.

C. Tool exposed surfaces of sealants to provide a substantial wash away from glass..

D. Clean off excess material and material smears adjacent to joints as work progresses using methods and materials approved by manufacturers.

E. Cease material installation under adverse weather conditions, or when temperatures are outside manufacturer's recommended limitations for installation, or when temperature of work area or substrate are below 40ºF.

END OF SECTION 079233

© Copyright 2016. All rights reserved. No part of this document may be reproduced in any form or by any means without permission from Walker Restoration Consultants.

SECTION 07950 – EXPANSION JOINT ASSEMBLIES

PART 1 - GENERAL

1.1 RELATED DOCUMENTS

A. Drawings and general provisions of the Contract, including General and Supplementary Conditions and Division 01 Specification Sections, apply to this Section.

1.2 SUMMARY

A. This Section includes the following:

1. Expansion joint systems for parking structures:

a. Elastomeric concrete edged, extruded rubber joint system

B. Contractor shall provide in writing the name of the proposed installer, manufacturer, and model of the expansion joint system. See also additional submittal requirements for minimum experience record and qualifications for system. Single licensed installer shall be responsible for providing complete sealant, expansion joint, and waterproofing system designed to minimize occurrence of common sealant, expansion joint, waterproofing, and concrete deterioration problems. All measures called for in these Specifications will be rigorously enforced.

C. Contractor shall provide in writing the name of the proposed installer, manufacturer, and model of the expansion joint system. See also additional submittal requirements for minimum experience record and qualifications for system. Single licensed installer shall be responsible for providing complete expansion joint system designed to minimize occurrence of common expansion joint, and concrete deterioration problems. All measures called for in these Specifications will be rigorously enforced.

D. Related Sections: The following Sections contain requirements that relate to this section:

1. Division 07 Section "Joint Sealants" for liquid-applied joint sealants.
2. Division 09 Section “Pavement Markings”.

1.3 DEFINITIONS

A. Maximum Joint Width: Widest linear gap a joint system tolerates and in which it performs its designed function without damaging its functional capabilities.

B. Minimum Joint Width: Narrowest linear gap a joint system tolerates and in which it performs its designed function without damaging its functional capabilities.

©2016, Walker Parking Consultants/Engineers, Inc. All rights reserved.

C. Movement Capability: Value obtained from the difference between widest and narrowest widths of a joint opening typically expressed in numerical values (mm or inches) or a percentage (plus or minus) of nominal value of joint width. Movement capability is to include anticipated movements from concrete shrinkage, concrete shortening and creep from post-tensioning or prestessing, cyclic thermal movements, and seismic movements.

D. Nominal Joint Width: The width of the linear opening specified in practice and in which the joint system is installed.

E. Nominal Form Width: Linear gap in joint system at time of forming or erection of structural elements bounding the expansion joint.

1.4 SUBMITTALS

A. Make submittals in accordance with requirements of Division 01 Section, “Submittal Procedures:”

1. See requirements of Division 01 Section, “Submittal Procedures,” Part 1 heading, “Submittal Procedures,” for limits to resubmittals.
2. See requirements of Division 01 Section, “Submittal Procedures,” Part 2 heading, “Requests for Information,” for RFI constraints.

B. Submittals and Resubmittals: Engineer will review each of Contractor’s shop drawings and/or submittal data the initial time and, should resubmittal be required, one additional time to verify that reasons for resubmittal have been addressed by Contractor and corrections made. Resubmittal changes/revisions/corrections shall be circled. Engineer will review only circled items and will not be responsible for non-circled changes/revisions/corrections and additions. Should additional resubmittals be required, Contractor shall reimburse Owner for all costs incurred, including the cost of Engineer’s services made necessary to review such additional resubmittals. Owner will in turn reimburse Engineer.

C. Requests For Information

1. Engineer reserves the right to reject, unprocessed, any Request for Information (RFI) that the Engineer, at its sole discretion, deems frivolous.
2. Engineer reserves the right to reject, unprocessed, any RFI that the Engineer, at its sole discretion, deems already answered in the Contract Documents.
3. RFI process shall not be used for requesting substitutions. Procedures for substitutions are clearly specified elsewhere in the contract documents.

D. Shop Drawings: Provide the following for each joint system specified:

1. Placement Drawings: Show project conditions including, but not limited to, line diagrams showing plans, elevations, sections, details, splices, blockout requirement, terminations, joint systems change planes, provide isometric or clearly detailed drawing depicting how components interconnect. Include reviewed and approved details from others whose work is related. Other information required to define joint placement or installation.

©2016, Walker Parking Consultants/Engineers, Inc. All rights reserved.

2. Shop drawings shall include temperature adjustment table with expansion joint opening calculated at 10°F increments. Shop drawing submittal shall show that proposed joint system is of similar configuration, capable of equal individual and combined movements in each direction when installed at designated temperature shown on drawings.

   Where installation temperature is other than specified temperature, submittal shall include calculations showing joint is capable of movement within design temperature range (Criteria on Drawings) for “other” temperature, and that design and installation follow manufacturer’s recommendations.

3. Joint System Schedule: Prepared by or under the supervision of the supplier. Include the following information in tabular form:

   a. Manufacturer and model number for each joint system.
   b. Joint system location cross-referenced to Drawings.
   c. Form width.
   d. Nominal joint width.
   e. Movement capability – see also Article: “Performance and Design Criteria”.
   f. Minimum and maximum joint width.
   g. Classification as thermal or seismic.
   h. Materials, colors, and finishes.
   i. Product options.
   j. Fire-resistance ratings.

4. Proposed method of preparation of concrete surface to receive the expansion joint systems. Mockups of the surface preparation may be required for review and to establish a control for the application.
5. Proposed method and details for treatment of cracks, bugholes, or other potential concrete surface defects in areas to receive the expansion joint systems.
6. Other information required to define joint placement or installation, including but not limited to horizontal spacing between embedded metals and plates to allow for volume change due to thermal conditions.
7. Other information required to define joint installation, including but not limited to temperature adjustment table to properly size joint gap at time of concrete pour. Caution, the expansion joint movement capability and the actual joint gap movement may not coincide. Contactor is required to construct actual joint gap in accordance with expansion design criteria.

E. Warranty Requirements: System manufacturer shall submit written plan of the construction and coordination requirements to allow the manufacturer to proceed with installation of joints with the specified warranty. Submit to OWNER for acceptance 2 months prior to ordering materials for construction and specifically address the following:

   1. Block out acceptance criteria.
   2. Surface preparation acceptance criteria.
   3. Crack, surface defect, and detailing recommendations.
   4. Method of protection of surrounding surfaces.
   5. Method of expansion joint system installation description.

©2016, Walker Parking Consultants/Engineers, Inc. All rights reserved.

6. Primer type and application rate.
7. Method of preparation of all glands and reinforced membranes.
8. Temperature, humidity and other weather constraints. Specify substrate moisture testing criteria, if any.
9. Final cure time before removal of protection, resumption of traffic, and/or paint striping.
10. Any other special instructions required to ensure proper installation.
11. Quality Service Requirements:

    a. Show evidence of licensed/approved installer. List of names, addresses and phone numbers, with copies of certification/approval agreement with each, satisfies requirement. Licensing/certification agreement shall include following information:

        1) Installer's financial responsibility for warranty burden under agreement terms.
        2) Manufacturer's financial responsibility for warranty burden under agreement terms.
        3) Process for dispute settlement between manufacturer and installer in case of system failures where cause is not evident or cannot be assigned.
        4) Authorized signatures for both Installer Company and Manufacturer.
        5) Commencement date of agreement and expiration date (if applicable).

    b. Provide copy of contractor's field application quality control procedures.
    c. Installer shall show evidence of minimum 5 projects completed by installer over previous 5 years using submitted system, or similar system.

F. Evidence of manufacturer's certification of installer/applicator. Evidence shall include complete copy of manufacturer's licensing/certification document, spelling out repair responsibility for warranty claims.

G. Signed statement from installer/applicator certifying that installer/applicator has read, understood, and shall comply with all requirements of this Section

H. Signed statement from manufacturer's representative that they have read, understood, and shall comply with all requirements of this section.

I. Two copies each of manufacturer's technical representative's log for each visit.

J. Five copies of snow removal guidelines for areas covered by warrantee.

K. Samples for each type of joint system indicated.

    1. Submit 2 samples for each type. Full width by 6 inches (150 mm) long, for each system required.
    2. Field samples of premolded joint sealant. Width, thickness and durometer hardness of sealant shall be checked by Testing Agency. Upward buckling caused by joint gap closure shall be limited to a maximum of ¼ inch per ADA Guidelines.

©2016, Walker Parking Consultants/Engineers, Inc. All rights reserved.

L. Other information required to define joint placement or installation.

M. Product Test Reports: Based on evaluation of comprehensive tests performed by a qualified testing agency, for current products.

N. ADA Certification: Prior to installation, submit written certification from manufacturer indicating that expansion joints conform to Americans with Disabilities Accessibility Guidelines for Buildings and Facilities, as published by U.S. Architectural & Transportation Barriers Compliance Board, 1331 F Street, N.W., Suite 1000, Washington, DC 20004-1111. 1-800-872-2253.

1. Submit test reports from accredited laboratory attesting to joint systems' movement capability and ADA compliance.
2. Static coefficient of friction shall meet minimum requirements of Americans with Disabilities Act (ADA).

O. Maintenance Manual: Submit 3 copies of System Maintenance Manual.

P. Certification that products and installation comply with applicable federal, state of Iowa, and local EPA, OSHA and VOC requirements regarding health and safety hazards.

1.5 MAINTENANCE PROGRAM

A. Provide separate line item bid price for 5 year maintenance program for the vehicle rated seismic expansion joint system. The Maintenance Program includes observations, reports, and maintenance of all components for seismic expansion joint system, including such items as cover plates, bolts, centering bars, springs, noise dampeners, extrusions, header material, and waterproofing membranes are to be covered by the agreement.

1.6 QUALITY ASSURANCE

A. Testing Agency: Independent testing laboratory employed by Owner and acceptable to Engineer/Architect.

B. Installer Qualifications: An employer of workers trained and approved by manufacturer.

C. Source Limitations: A single Installer shall be responsible for providing complete expansion joint system. Obtain joint systems through one source from a single manufacturer.

D. Product Options: Drawings indicate size, profiles, and dimensional requirements of joint systems and are schematic for systems indicated in Part 2.

1. Do not modify intended aesthetic effects, as judged solely by Architect, except with Architect's approval. If modifications are proposed, submit comprehensive explanatory data to Architect for review.
2. Refer to Division 01 Section "Product Requirements."

©2016, Walker Parking Consultants/Engineers, Inc. All rights reserved.

E. Walking Surfaces: Expansion joint assemblies at walking areas subject to pedestrian traffic shall provide a smooth, slip resistant walking surface for pedestrians with these minimum requirements:

1. Shall provide walking surfaces in accordance with ASTM – F 1637 Standard Practice for Safe Walking Surfaces.
2. Shall be designed to comply with "Americans with Disabilities Act (ADA), Accessibility Guidelines (ADAAG)" Americans with Disabilities Accessibility Guidelines for Buildings and Facilities, as published by U.S. Architectural & Transportation Barriers Compliance Board, 1331 F Street, N.W., Suite 1000, Washington, DC 20004-1111. 1–800-872-2253.
3. Adjoining walkway surfaces shall be flush and meet the following minimum requirements:

   a. Changes in level of less than ¼ inch in height may be without edge treatment as shown in ADA Figure 303.2 and on the Drawings.
   b. Changes in Level between ¼ inch and ½ inch in height shall be beveled with a slope no greater than 1:2 as shown in ADA Figure 303.3 and on the Drawings.
   c. Changes in level grater than ½ inch in height are not permitted unless they can be transitioned by means of a ramp as shown on Drawings.
   d. Openings in floor or ground surfaces shall not allow passage of a sphere more than ½ inch diameter except as allowed for elevators and platform lifts as shown in ADA Figure 302.3 and on the Drawings.

F. Fire-Test-Response Characteristics: Where indicated, provide expansion joint system and fire-barrier assemblies identical to those of assemblies tested for fire resistance per UL 2079 by a testing and inspecting agency acceptable to authorities having jurisdiction.

G. Materials shall be compatible with materials or related Work with which they come into contact and the related materials sections.

H. Manufacturer/Applicator: Review and approve all details before construction. Confirm in writing to OWNER.

I. Installer: Coordinate services with related Work including layout of joint system and approval of methods for providing joints.

J. Installer: Inspect site to insure proper joint configuration in field.

K. Testing Agency shall check Shore A hardness of materials in accordance with ASTM D2240 and ensure the limited upward buckling of ¼ inch or less.

L. Pre-installation Conference: Meet at project site well in advance of time scheduled for Work to proceed to review requirements for Work and conditions that could interfere with successful expansion joint system performance. Require every party concerned with concrete formwork, blockout, concrete placement, or others required to coordinate or protect the Work thereafter, to attend. Include manufacturer's technical representative and warranty officer.

©2016, Walker Parking Consultants/Engineers, Inc. All rights reserved.

M. Manufacturer: Provide qualified technical representative for periodic inspection of Work at critical time of the installation, including but not limited to pre-concrete formwork and placement site meetings, block out inspection, surface defect repair, surface preparation, metal work, expansion gland installation and waterproofing system installation.

N. Deliver all materials to site in original, unopened containers, bearing following information:

1. Name of product.
2. Name of manufacturer.
3. Date of preparation.
4. Lot or batch number.

O. Store materials under cover and protect from weather. Replace packages or materials showing any signs of damage with new material at no additional cost to Owner.

P. Weather and Substrate Conditions: Proceed with work only when existing and forecast weather and temperature of concrete substrate will permit work in accordance with manufacturer's recommendations.

Q. Provide reports to owner detailing maintenance activities have been performed in accordance with written maintenance agreement for expansion joints.

1.7 COORDINATION

A. Coordinate construction of the concrete joint openings and block outs. Provide expansion joint system requirements for concrete joint openings, configuration, and surfaces accepting expansion joint materials. Provide requirements for joint opening width, transitions, tolerances, level, plum, and to ensure the installed expansion joint system can perform with expected movement capabilities.

B. Expansion joint blockouts shall be floated and troweled before final cure to remove all air pockets, voids and spalls caused by form work. Blockouts shall be plumb with maximum tolerance of Manufacturer or not more than 0.125 inches deviation in 12 inches. Blockouts shall be straight and true with maximum tolerance of Manufacturer or not more than 0.250 inches deviation in 10 lineal feet. Noncompliant blockouts will be considered major defects. Refer to Items below.

C. Expansion joint surface areas each side of joint gap shall be finish graded perpendicular to joint gap creating flush slab-to-slab transition for a minimum of three feet. Elevations on each side shall have a vertical differential less than ¼” and meet requirements of expansion joint manufacturer.

D. Minor surface defects shall be repaired according to manufacturer’s recommendations. Repair materials shall be compatible to intended system materials and shall be approved by the Engineer prior to surface preparation and installation.

E. All major defects shall be submitted for project approvals. The CONTRACTOR shall provide repair products and methods of repair. Repair description shall indicate

©2016, Walker Parking Consultants/Engineers, Inc. All rights reserved.

materials, manufacturer's requirements, expected service life, and maintenance requirements. Repair description shall be submitted for project approvals. All repairs of slab and blockout surfaces shall be repaired by contractor. CONTRACTOR to take all precautions necessary to avoid damaging adjacent surfaces and embedded reinforcement or post tensioned anchors and tendons. CONTRACTOR is responsible for any damages. Concrete repairs shall be of rectangular configuration, with no feather-edged surfaces. Final surface preparation of all repairs shall be sandblasting, or approved equal.

1.8 WARRANTY

A. Warranty period shall be a 5 year labor and materials warranty commencing with date of acceptance of work.

1. Warranty shall be jointly executed by Manufacturer and Installer for labor and materials.

B. Perform any repair under this warranty at no cost to Owner.

C. Expansion Joint Systems Manufacturer: Furnish OWNER with written Warranty detailing responsibilities of General Contractor, manufacturer and installer with regard to warranty requirements, as outlined in the Manufacturer's warranty and related Licensing/Certification documents. Submit a copy of the warranty and related documents and/or Licensing/Certification Agreement. The warranty shall provide that system will be free of defects, water penetration and chemical damage related to system design, workmanship or material deficiency, consisting of:

1. Any water leakage through the expansion joint system or leaking conditions of the reinforced membrane, other waterproofing components, or glands.
2. Any adhesive or cohesive failures of the system.
3. Shifting of plates out of alignment due to system failure.
4. Loose plates, anchor blocks, bolts.
5. Metal to metal noises during use.
6. Tears, weathering, or degradation in gland from normal use.
7. Expansion joint glands are considered defective if they buckle upwards beyond the level of the floor surface after installation.

D. If expansion joint systems or components show any of defects listed above, supply labor and material to repair all defects at no cost to OWNER.

1. Components of the systems include the following:

a. Extrusions
b. Bolts
c. Springs
d. Centering bars
e. Sound dampeners
f. Cover plates
g. Elastomeric header material
h. Reinforced membranes and associated drainage components

©2016, Walker Parking Consultants/Engineers, Inc. All rights reserved.

1.9 PERFORMANCE AND DESIGN CRITERIA

A. Expansion Joint Assembly Performance and Design Criteria: provide the following minimum requirements:

1. Expansion joint design shall meet or exceed all of the expected movements shown on the drawings.
2. Installation temperature range and estimated volume change movements are shown on the drawings. The nominal form width shown on the drawings shall be adjusted for the ambient temperature at the time of installation and the designer shall verify that the width of the joint at installation shall meet the minimum installation requirements.
3. Expansion joint systems shall be capable of resisting a differential vertical movement of ½ inch.
4. Materials shall be supplied in lengths to minimize or eliminate the need to splice the waterproofing components.

    a. Materials shall be supplied with no joints in the vehicle drive aisles and with lengths no shorter than 20 feet.
    b. All mitered splices shall be performed at the factory and provide sufficient gland length for butt splicing with field splicing equipment.
    c. All Santoprene butt to butt splices shall be heat welded.
    d. Butt to butt splices with other materials shall be per manufacturer's recommendations.

5. Expansion joint assemblies subject to vehicular traffic shall be designed for vehicular loading, including vertical wheel load and associated lateral thrust generated by passing vehicular traffic in drive aisles, but not less than the following:

    a. Expansion joint assemblies subject to snow plows shall be recessed and designed for a minimum vehicle wheel load of 4,000 lbs.
    b. Minimum additional vertical load factor of 1.3 shall be used to allow for dynamic, vibratory, and impact effects.
    c. Minimum horizontal force of fifty percent of the maximum vertical wheel load shall be applied in combination with vertical loads to account for vehicle de-acceleration and acceleration effects.
    d. System shall be designed for passenger vehicles traveling at low sustained speeds in a garage.

6. Walking Surfaces as specified in Article "Quality Assurance" Paragraph E "Walking Surfaces".

B. Shop drawings shall include temperature adjustment table with expansion joint opening calculated at increments as indicated in Article "Submittals".

©2016, Walker Parking Consultants/Engineers, Inc. All rights reserved.

PART 2 - PRODUCTS

2.1 MANUFACTURERS

A. Manufacturer: Subject to compliance with requirements, provide products of 1 of following, only where specifically named in product category:

1. Balco Inc., Wichita, KS (Balco).
2. Construction Specialties, Inc., Muncy, PA (C/S).
3. Dow Corning Corp., Midland, MI (Dow Corning).
4. Emseal Joint Systems, Westborough, MA (Emseal).
5. Erie Metal Specialties, Inc., Akron, NY (EMS).
6. Lymtal International Inc. Lake Orion, MI (Lymtal).
7. MM Systems Corporation, Atlanta, GA (MM).
8. TechStar, Inc., Findlay, OH (TechStar).
9. Tremco, Cleveland, OH (Tremco).
10. Watson Bowman Acme Corporation, a Division of BASF Construction Chemicals NA, Amherst, NY (WBA).

2.2 MATERIALS, EXPANSION JOINT SYSTEMS

A. General:

1. Material shall be applied in lengths to minimize or eliminate the need to splice the waterproofing components.
2. Materials shall meet requirements in specification Article “Performance and Design Criteria”, specification paragraph “Expansion Joint Assembly Performance and Design Criteria”.
3. Materials installed in surfaces with pedestrian traffic shall conform to requirements for walking surfaces in Article “Performance and Design Criteria”.

B. Elastomeric concrete edged, extruded rubber expansion joint system where shown. Acceptable systems:

1. C/S Elastomeric Membrane/Nosing System, Model WF or C/S Zip Block System, Model ZB, C/S.
2. IsoFlex Elastomeric Membrane/Nosing System, DuraBlock, LymTal.
3. Lokcrete Membrane System (LMS) Series, MM.
4. Wabo®Crete II Membrane 201 System, WBA.
5. Thermaflex Membrane/Nosing System, Type TM and TCR Series, Emseal.
6. Polycrete/Membrane System, Type CR Series, EMS.
7. Vulkem WF series Vehicular Expansion Joint System, Tremco.
8. DuraFlex Chambered Wing Seal CS and DCS Seris, Balco.

C. Substitutions: **None** for this project. Contact Engineer/Architect for consideration for future projects.

©2016, Walker Parking Consultants/Engineers, Inc. All rights reserved.

PART 3 - EXECUTION

3.1 EXAMINATION

A. Examine surfaces and blockouts where expansion joint systems will be installed for installation tolerances and other conditions affecting performance of work.

1. Proceed with installation only after unsatisfactory conditions have been corrected.

3.2 PREPARATION

A. Prepare substrates according to joint system manufacturer's written instructions.

B. Repair concrete slabs and blockouts using manufacturer's recommended repair grout of compressive strength adequate for anticipated structural loadings.

C. Coordinate and furnish anchorages, setting drawings, and instructions for installing joint systems. Provide fasteners of metal, type, and size to suit type of construction indicated and to provide for secure attachment of joint systems.

D. Coordinate and verify that related Work meets following requirements:

1. Concrete surfaces are finished as acceptable for system to be installed.
2. Check adhesion to substrates and recommend appropriate preparatory measures.
3. Curing compounds used on concrete surfaces are compatible with Work to be installed.
4. Concrete surfaces have completed proper curing period for system selected.
5. Coordinate expansion joint system with other related Work before installation of expansion joint.
6. Verify expansion joints are compatible with Joint Sealants and traffic toppings.

E. Acid etching: Prohibited.

F. All openings to occupied space shall be sealed to prevent cleaning materials, solvents and fumes from infiltration. All protective measures and/or ventilating systems required to prevent infiltration are incidental to this Work.

G. General Contractor: Correct unsatisfactory conditions in manner acceptable to installer before installing sealant system. All bugholes and air voids in blockouts shall be patched as acceptable to Engineer/Architect prior to installation of Expansion Joint Sealant system.

1. Proceed with expansion joint system only after unsatisfactory conditions have been corrected in manner acceptable to installer.

H. Clean joints thoroughly in accordance with manufacturer's instructions to remove all laitance, unsound concrete and curing compounds which may interfere with adhesion.

©2016, Walker Parking Consultants/Engineers, Inc. All rights reserved.

I. Cease installation of expansion joints under adverse weather conditions, or when temperatures are outside manufacturer's recommended limitations for installation.

J. Prepare for installation of extruded expansion joint systems in accordance with manufacturer's recommendations.

K. Cease installation if expansion joint blockouts and/or openings exhibit cracked edges, voids or spalls. Repair with accepted material prior to installation of expansion joint.

L. Check elevations on each side of expansion joint gap utilizing metal straight edge to ensure flush slab-to-slab transition. Recommend remedial correction.

M. Check anticipated or actual minimum and maximum joint openings with Engineer. Compare to manufacturer’s movement specifications and make joint sizing recommendations.

3.3 INSTALLATION

A. Comply with manufacturer's written instructions for storing, handling, and installing joint assemblies and materials unless more stringent requirements are indicated.

B. Manufacturer's technical representative, acceptable to Engineer/Architect, shall be on site during surface preparation and installation.

C. Cease material installation under adverse weather conditions, or when temperatures are outside manufacturers recommended limitations for installation, or when temperature of work area or substrate are below 40ºF.

D. During months when historic mean daily temperature at Project is 20° F. or more colder than annual mean daily temperature, premolded sealant shall be installed on temporary basis to prevent hot weather buckling. Provide permanent installation during acceptable weather conditions.

E. Terminate exposed ends of joint assemblies with field- or factory-fabricated termination devices.

F. In-place testing: Prior to opening to traffic, test joint seal for leaks with maintained continuously wet for 12 hours. Repair leaks revealed by examination of seal underside. Repeat test and repairs until all leaks stopped for full 12 hours.

3.4 PROTECTION

A. Do not remove protective covering until finish work in adjacent areas is complete. When protective covering is removed, clean exposed metal surfaces to comply with manufacturer's written instructions.

B. Protect the installation from damage by work of other Sections. Where necessary due to heavy construction traffic, remove and properly store cover plates or seals and

©2016, Walker Parking Consultants/Engineers, Inc. All rights reserved.

install temporary protection over joints. Reinstall cover plates or seals prior to Substantial Completion of the Work.

3.5 CLEANING

A. Clean off excess material and material smears adjacent to joints as work progresses using methods and materials approved by manufacturers.

END OF SECTION 07950

© Copyright 2016. All rights reserved. No part of this document may be reproduced in any form or by any means without permission from Walker Parking Consultants/Engineers, Inc.

SCOPE OF WORK THIS YEAR

Work is limited to the work items and quantities on the bid form. Location of work is graphically depicted on plan sheets. Owner reserves the right to increase or decrease bid quantities at the same unit price. All work items in Section 02000, details, and work items noted on plan sheets not on bid form shall be ignored.

SHEET INDEX

R-001 - GENERAL NOTES, SHEET INDEX, AND LEGEND

R-101 - PARTIAL LOWER & GROUND LEVEL FLOOR PLANS
R-102 - LEVEL 1 & 2 FLOOR PLANS
R-103 - LEVEL 3 & 4 FLOOR PLANS
R-104 - LEVEL 5 & 6 FLOOR PLANS
R-105 - PARTIAL TOP LEVEL FLOOR PLAN

LEGEND

MATCH LINE NUMBER

= EXPANSION JOINT

= CONSTRUCTION JOINT

= FLOOR SPALL OR DELAMINATION

= CEILING SPALL OR DELAMINATION

= FLOOR DRAIN

= TRAFFIC TOPPING

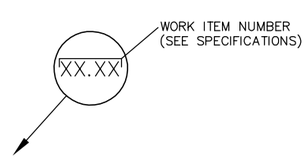

WORK ITEM IDENTIFICATION

A. Structural Description

The Rivers Landing Parking Facility was constructed in 1975 and is comprised of 7 levels; 6 supported levels and a concrete slab-on-grade level. The slab-on-grade level is composed of a parking management office, maintenance shop and storage, and parking. The structural system consists of cast-in-place, one-way, mono strand post-tensioned floor slabs supported by precast, prestressed and/or post-tensioned spread single tee beams, which frame into precast conventionally reinforced columns. Perimeter walls are a combination of cast-in-place concrete and precast wall panels. Since original construction, traffic bearing elastomeric waterproof membrane (traffic topping) has been installed on entire supported floor slab area.

Rivers Landing is about 300 feet long (east-west direction) and 125 feet wide (north-south direction) with 217,000 square feet of supported floor and 37,000 square feet of slab-on-grade. There are approximately 695 parking spaces.

The facility is a two bays double threaded helix with one-way traffic and angled parking. Vehicles enter the facility at the south bay from Douglas Street and Pearl Street and exit the facility from the bay onto Douglas Street.

There are three stair/elevator tower located at the northwest, northeast, and southeast corners. A skywalk connects the southeast stair/elevator tower at Level 1 with the building on the east side of Douglas Street. There is one stair tower located at the southwest corner of the facility. Stairs are constructed of cast-in-place concrete.

B. General

1. Drawings are based on information from original construction drawings provided by Owner. Original Design Drawings and Repair Drawings are available for review from Owner. Contractor shall make such investigations as it deems necessary in advance of bidding. Contractor shall promptly notify Owner/Engineer, in writing, of any discrepancies found between drawings and field conditions during construction.
2. Contractor is responsible for determining actual extent and locations of repair areas in accordance with drawings and specifications; Work Items and bubbles shown on drawings is shown only to represent types of deterioration and general location. Prior to fabrication of any material or placement of concrete, all Work Item quantities shall be marked and quantified by Contractor. Report quantities to Engineer. Contractor to receive written approval from Engineer prior to beginning work. Any work completed beyond approved quantities is at no cost to Owner.
3. Work Items are identified on Drawings. Specification Section 01112 is a summary of work for restoration. Section 02000 defines scope of work to be accomplished, referenced details, approved materials, referenced specification sections, and execution of work to be completed by a restoration contractor specializing in parking structure restoration.
4. Dimensions shown on plans are based on original construction documents. Contractor is required to field verify all conditions for purpose of preparing bid and performing work. Do not scale drawings.
5. Construction shall be in accordance with all applicable Federal, State of Iowa and City of Sioux City codes and ordinances, including Fire Codes.
6. All material properties shall be as noted in Specifications.

C. Details and Symbols

1. Details with clarification detail number other than 0 and labeled (FOR CLARIFICATION ONLY) do not represent a separate price item. These details supplement basic detail to provide additional information. In some cases these details show variation of typical condition.
2. Where Work Item bubble is noted "TYP", it means work item occurs at all locations where applicable deterioration or designation symbol occurs on that plan.
3. Where "Typical As Required" (TAR) is noted, it means there may be areas of this work in addition to particular designated areas.
4. Where two or more Work Item bubbles are grouped together, it means any or all designated Work Items may be applicable. Coordination of Work Items is Contractor's responsibility.
5. When a Work Item or Detail is listed as incidental, that work is included in pay unit of other work items and does not have a separate price.
6. When a Detail is labeled (FOR REFERENCE ONLY) it provides information about incidental work and does not have a pay unit.

D. Concrete Protection for Reinforcement

1. Minimum concrete cover for reinforcement shall be per ACI, unless noted otherwise.

a.	Slab top reinforcement	1-1/2"
b.	Slab bottom reinforcement	3/4"
c.	Beam top reinforcement	3"
d.	Beam stirrups at sides and bottom of beam	1-1/-2"
e.	Beam stirrups at top of beam	2-1/2"
f.	Column ties	1-1/2"

E. Epoxy Coating

1. Clean by sand blasting all steel to near white and epoxy coat all existing reinforcement, steel, and electrical conduit in repair area to be cast in concrete.
2. All new reinforcing steel shall be fusion bonded epoxy
3. Anchoring system for reinforcing steel shall be Hilti "Hit HY-150", or equivalent.

F. Shoring and Bracing

1. Contractor shall provide all shoring, bracing, sheeting, etc. required for safety and proper execution of work as incidental to work, unless noted otherwise.
2. Contractor is solely responsible to prepare shop drawing for bracing and shoring members. Contractor hired professional engineer, registered in State of Iowa, shall submit sealed calculations and drawings to Engineer for record.

G. Existing Conditions, Services and Utilities

1. Following is incidental to all work. All items that are existing and fixed to parking facility shall be protected or removed, stored, and reinstalled to original integrity, and contractor damaged items shall be repaired or replaced to original integrity at no cost to Owner.
2. Following are fixed items, but not limited to: Light fixtures, exposed electrical conduit, floor drain piping, standpipes, mechanical and electrical lines and utilities, signs, doors, elevators, entrance, vestibules, parking equipment, guardrails, guardrail cables, etc.
3. Contractor shall review all existing conditions to determine all electrical and mechanical services and utilities affected by repair work. Make necessary temporary connections to maintain existing services to all areas of parking garage or other areas affected by work. Contractor shall submit methods and schedule of connections for Owner approval prior to commencement.
4. Floor slabs have embedded electrical conduit. Contractor shall contact Owner when electrical conduit is encountered unless noted otherwise. Owner to determine if electrical conduit is functioning. If not functioning, Contractor shall remove conduit from patch cavity. If functioning, Contractor shall repair conduit/conductors as needed.

H. Construction Phasing, Sequencing and Traffic Maintenance

1. Work sequence shall be coordinated with Owner's representative.
2. Owner will continue to use parking facilities during rehabilitation. Contractor can take parking spaces out of service asspecified at any time and must phase and arrange work so as to maintain access at all times to all parking areas that are not under construction for both vehicles and pedestrians.
3. Contractor shall install barricades during all phases of the project between construction areas and parking areas, drive lanes and pedestrian walk areas. Minimum barricades shall be a continuous wall 4' tall. Signs shall be mounted on outside of barricades at 20' O.C. stating "Construction Area Keep Out". Contractor shall meet minimum safety requirements for temporary floor openings, wall openings, stairways and other unprotected edges within construction areas.

I. General Member Repair Notes:

1. Caution: Post-Tensioning tendons are near the floor and ceiling surface at spalls and delaminations. Contractor shall exercise extreme caution during sawcutting and removals so as not to damage existing tendons or tendon sheaths. Tendons may break with explosive force during removals or when cut. Chipping with 15 lb. hammers shall be used in lieu of sawcutting near shallow tendons.
2. Caution: Single tee beams are prestressed and post-tensioned, and tendons are near surface of floor slab adjacent to columns. Contractor shall exercise extreme caution when saw-cutting and removing concrete so as not to damage existing tendons. Tendons may break with explosive force when cut. Chipping with 15 lb. hammers shall be used in lieu of sawcutting near shallow tendons.
3. Contractor is solely responsible for:
   a. Training and monitoring his work force concerning safety procedures to be employed in execution of this work and protection of public and property.
   b. Maintaining stability of structure and elements within structure during repair work, including but not limited to installation of shoring and bracing.
   c. Contractor shall submit sealed drawings and calculations from qualified Professional Engineer, legally registered in state of Iowa to perform such calculation and drawings.
4. During repair sequence, shoring of floor slab may be required along tendon run. As a minimum, shores shall be installed along tendon run when more than three adjacent tendon failures occur, unless otherwise designed and submitted by Contractor's Professional Engineer.
5. Contractor shall be responsible for reviewing available original construction drawings and coordination of repair procedures prior to proceeding with work. Exact locations shall be verified in field by Contractor prior to concrete removals. Existing reinforcing steel not shown on repair details, unless noted otherwise. Do not cut any reinforcing, unless directed by engineer in writing.
6. Post-tension repairs and de-tensioning procedures developed by Contractor shall be reviewed at preconstruction meeting. No deviation from agreed upon procedures will be allowed unless directed in writing by Engineer. As a minimum, during detensioning operations, close all floor spans including level below, being detensioned, to prevent injury in event of a tendon exploding out of slab. Protect slab edge from wire projectiles.
7. Reference sheet note 1 on following sheets for specific information regarding post-tension repairs. Not all tendon failures are in areas of floor delamination. Should contractor identify areas suspected of containing tendon failure notify Engineer. Perform removal of sound concrete as required to expose tendons and anchors at direction of Owner/Engineer only.
8. Maintain original tendon profiles within concrete removal areas.
9. Tendons occur individually. Use caution to avoid damage to tendons in repair area. Contractor caused damage to tendons shall be repaired as directed by Engineer at no cost to Owner.
10. All post-tension placement and preparation shall be reviewed by Engineer prior to commencing with post-tension repairs.

J. Abbreviations

APPROX	=	Approximately
BM	=	Beam
BOT	=	Bottom
CIP	=	Cast in Place
CJ	=	Construction Joint/Control Joint
CLR	=	Clearance
CMU	=	Concrete Masonry Unit
COL	=	Column
CONC	=	Concrete
CONT	=	Continuous
CY	=	Cubic Yard
DET	=	Detail
DIA	=	Diameter
EA	=	Each
EJ	=	Expansion Joint
EXIST	=	Existing
FD	=	Floor Drain (Existing)
FIN	=	Finished
FL	=	Floor
GALV	=	Hot Dipped Galvanized
HORIZ	=	Horizontal
INC	=	Incidental
JT	=	Joint
KSI	=	Kip Per Square Inch
LBS	=	Pounds
LF	=	Linear Foot
LMC	=	Latex Modified Concrete
LS	=	Lump Sum
MAX	=	Maximum
MIN	=	Minimum
N/A	=	Not Applicable
NFD	=	New Floor Drain
OC	=	On Center
OH	=	Opposite Hand
P/T	=	Post-tension (ed) (ing)
PSI	=	Pounds Per Square Inch
REINF	=	Reinforcement
REQ'D	=	Required
RWC	=	Rain Water Collector (Horizontal or Vertical)
SF	=	Square Foot
SIM	=	Similar
SOG	=	Slab on Grade
SPEC	=	Specification
Standpipe	=	Existing Manual Dry Standpipe System (Horizontal or Vertical)
SUPP	=	Supported
TAR	=	Typical As Required
TT	=	Traffic Topping
TYP	=	Typical
VERT	=	Vertical
UN or UNO	=	Unless Noted Otherwise
VIF	=	Verify in Field
WI	=	Work Item
WWR	=	Welded Wire Reinforcement

WALKER
RESTORATION CONSULTANTS
1660 South Highway 100
Suite 545
Minneapolis, MN 55416
952.595.3515 Ph
952.595.3518 Fax
www.walkerrestoration.com

LICENSED PROFESSIONAL ENGINEER
TERRENCE ARVO HAKKOLA
14501
IOWA

I HEREBY CERTIFY THAT THIS ENGINEERING DOCUMENT WAS PREPARED BY ME OR UNDER MY DIRECT PERSONAL SUPERVISION AND THAT I AM A DULY LICENSED PROFESSIONAL ENGINEER UNDER THE LAWS OF THE STATE OF IOWA.

PRINTED NAME:
TERRENCE A. HAKKOLA, P.E.
DATE: 02-12-2016

MY LICENSE RENEWAL DATE IS:
DECEMBER 31, 2017

DATE ISSUED: 02-12-2016

2016 RIVERS LANDING
PARKING FACILITIES REPAIRS PROJECT
SIOUX CITY
IOWA

MARK	DATE	DESCRIPTION
	02-12-2016	CONSTRUCTION DOCUMENTS

ISSUE:

PROJECT NO: 21-4188.00
DRAWN BY: LJP
CHECKED BY: CLS

SHEET TITLE:
GENERAL NOTES, SHEET INDEX, AND LEGEND

R-001

J:\21-4188-00-RIVERS_LANDING_2016\ACAD\REST\4188_R001.DWG 2/10/2016 3:01:48 PM MASTEL, LISA

Copyright 2014. All rights reserved. No part of this document may be reproduced in any form or by any means without permission from Walker Parking Consultants/Engineers, Inc.

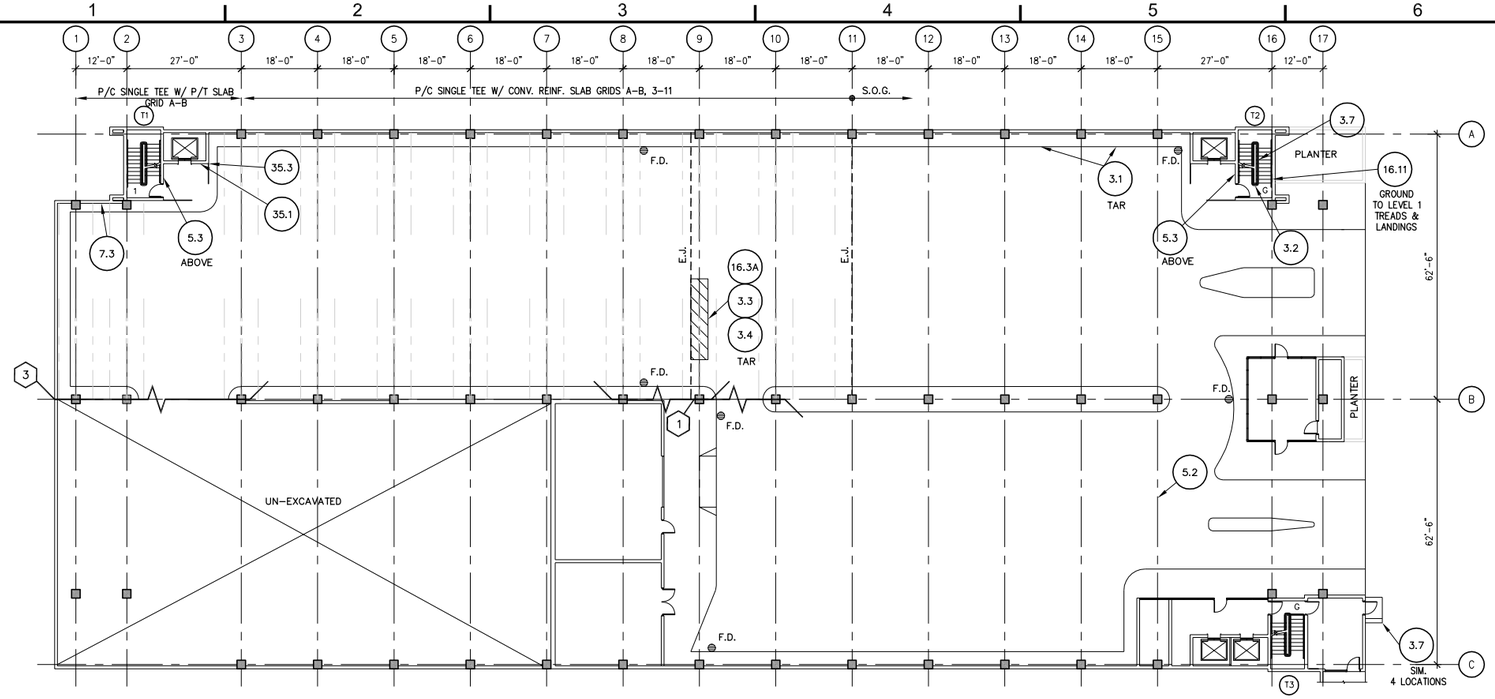

C1 GROUND LEVEL FLOOR PLAN

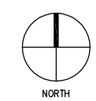

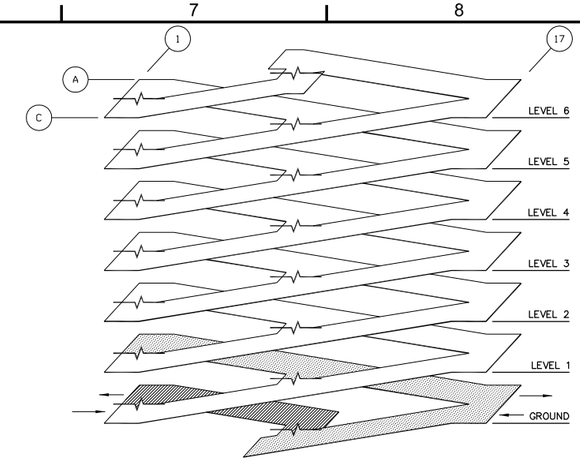

ISOMETRIC

SCOPE OF WORK THIS YEAR

Work is limited to the work items and quantities on the bid form. Location of work is graphically depicted on plan sheets. Owner reserves the right to increase or decrease bid quantities at the same unit price. All work items in Section 02000, details, and work items noted on plan sheets not on bid form shall be ignored.

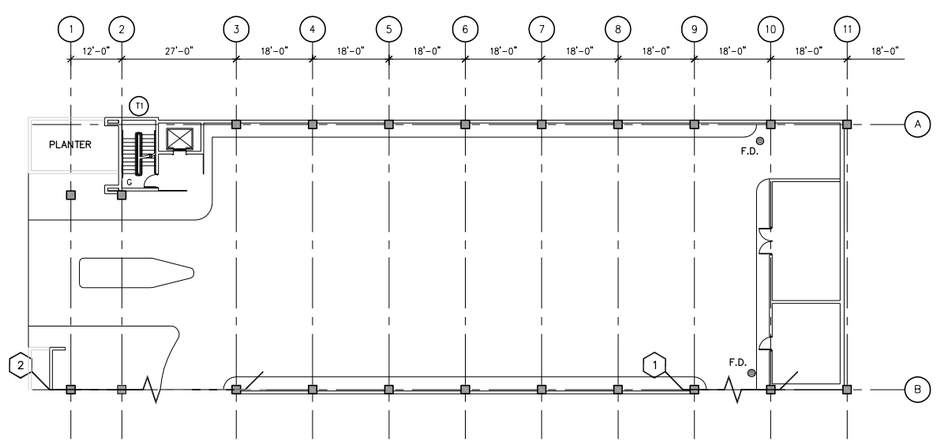

A1 PARTIAL LOWER LEVEL FLOOR PLAN
CONCRETE SLAB ON GRADE

SHEET NOTES:

1. SPECIFIC LOCATIONS FOR WORK ITEMS 3.5, 3.6 AND RELATED POST-TENSIONING SYSTEM (WORK ITEM SERIES 21) REPAIRS HAVE NOT BEEN IDENTIFIED BUT ARE ANTICIPATED TO BE ENCOUNTERED DURING PERFORMANCE OF WORK ITEMS 3.3 OR 3.4. NOTIFY ENGINEER OF ANY FAILED, BROKEN, OR CORRODED POST-TENSIONING TENDONS OR ANNCHORS ENCOUNTERED. CONCRETE WORK RELATED TO POST-TENSION REPAIRS WILL BE PAID BY WI-3.5 OR 3.6 FOR CORRESPONDING CONDITION, AND POST-TENSIONING REPAIRS WILL BE PAIR BY RESPECTIVE WI SERIES 21 ITEM.

3.5
3.6
16.3A
21.0
TAR
GRIDS 1-3, 15-17

WALKER
RESTORATION CONSULTANTS
1660 South Highway 100
Suite 545
Minneapolis, MN 55416
952.595.3518 Tel
952.595.3518 Fax
www.walkerrestoration.com

LICENSED PROFESSIONAL ENGINEER
TERRENCE ARVO HAKKOLA
14501
IOWA

I HEREBY CERTIFY THAT THIS ENGINEERING DOCUMENT WAS PREPARED BY ME OR UNDER MY DIRECT PERSONAL SUPERVISION AND THAT I AM A DULY LICENSED PROFESSIONAL ENGINEER UNDER THE LAWS OF THE STATE OF IOWA.

PRINTED NAME:
TERRENCE A. HAKKOLA, P.E.
DATE: 02-12-2016

MY LICENSE RENEWAL DATE IS:
DECEMBER 31, 2017

DATE ISSUED: 02-12-2016

2016 RIVERS LANDING
PARKING FACILITIES REPAIRS PROJECT
SIOUX CITY IOWA

MARK	DATE	DESCRIPTION
	02-12-2016	CONSTRUCTION DOCUMENTS

ISSUE:

PROJECT NO: 21-4188,00
DRAWN BY: LJP
CHECKED BY: CLS
SHEET TITLE:
PARTIAL LOWER & GROUND LEVEL FLOOR PLANS

R-101

J:\21-4188-00-RIVERS_LANDING_2016\ACAD\RESTI\4188_R101.DWG 2/29/2016 1:56:45 PM MASTEL, LISA

Copyright 2014. All rights reserved. No part of this document may be reproduced in any form or by any means without permission from Walker Parking Consultants/Engineers, Inc.

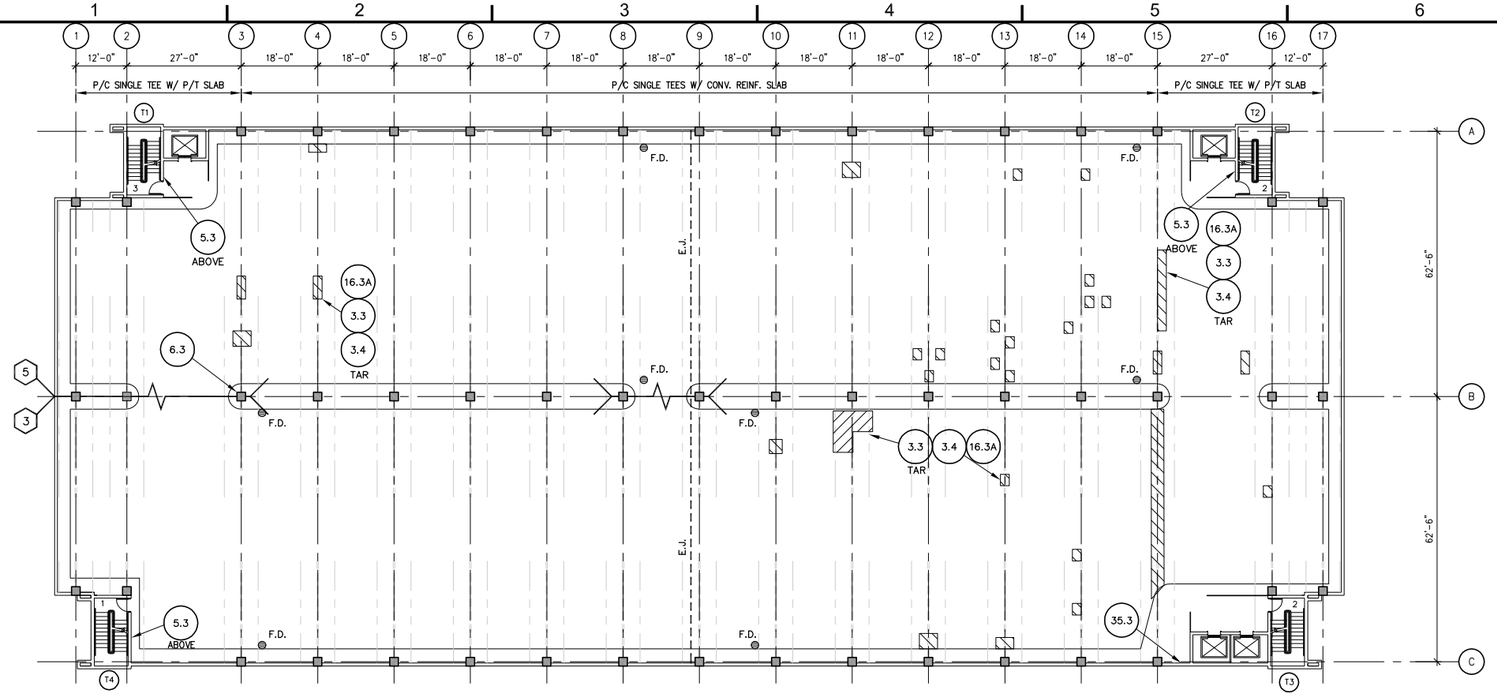

C1 LEVEL 2 FLOOR PLAN

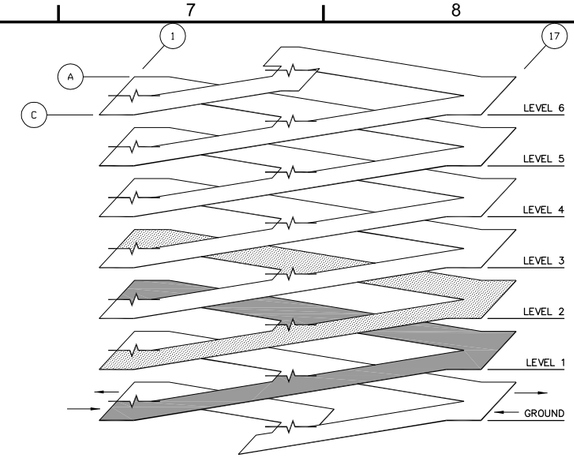

ISOMETRIC

SCOPE OF WORK THIS YEAR

Work is limited to the work items and quantities on the bid form. Location of work is graphically depicted on plan sheets. Owner reserves the right to increase or decrease bid quantities at the same unit price. All work items in Section 02000, details, and work items noted on plan sheets not on bid form shall be ignored.

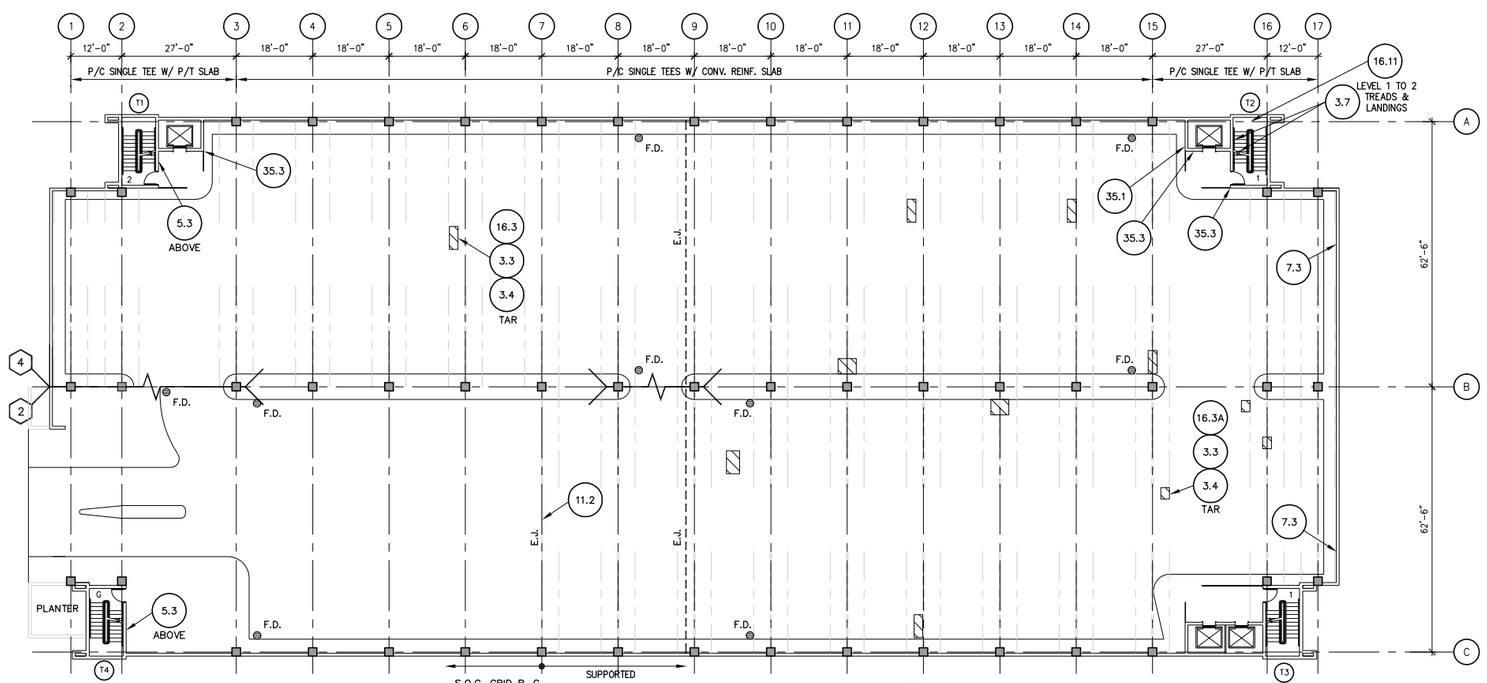

A1 LEVEL 1 FLOOR PLAN

NORTH

SHEET NOTES:

1. SPECIFIC LOCATIONS FOR WORK ITEMS 3.5, 3.6 AND RELATED POST–TENSIONING SYSTEM (WORK ITEM SERIES 21) REPAIRS HAVE NOT BEEN IDENTIFIED BUT ARE ANTICIPATED TO BE ENCOUNTERED DURING PERFORMANCE OF WORK ITEMS 3.3 OR 3.4. NOTIFY ENGINEER OF ANY FAILED, BROKEN, OR CORRODED POST–TENSIONING TENDONS OR ANNCHORS ENCOUNTERED. CONCRETE WORK RELATED TO POST–TENSION REPAIRS WILL BE PAID BY WI–3.5 OR 3.6 FOR CORRESPONDING CONDITION, AND POST–TENSIONING REPAIRS WILL BE PAIR BY RESPECTIVE WI SERIES 21 ITEM.

3.5
3.6
16.3A
21.0
TAR
GRIDS 1–3, 15–17

WALKER
RESTORATION CONSULTANTS
1660 South Highway 100
Suite 545
Minneapolis, MN 55416
952.595.3515 Phone
952.595.3518 Fax
www.walkerrestoration.com

LICENSED PROFESSIONAL ENGINEER
TERRENCE ARVO HAKKOLA
14501
IOWA

I HEREBY CERTIFY THAT THIS ENGINEERING DOCUMENT WAS PREPARED BY ME OR UNDER MY DIRECT PERSONAL SUPERVISION AND THAT I AM A DULY LICENSED PROFESSIONAL ENGINEER UNDER THE LAWS OF THE STATE OF IOWA.

PRINTED NAME:
TERRENCE A. HAKKOLA, P.E.
DATE: 02-12-2016

MY LICENSE RENEWAL DATE IS:
DECEMBER 31, 2017

DATE ISSUED: 02-12-2016

2016 RIVERS LANDING
PARKING FACILITIES REPAIRS PROJECT
SIOUX CITY IOWA

MARK	DATE	DESCRIPTION
	02-12-2016	CONSTRUCTION DOCUMENTS

ISSUE:

PROJECT NO: 21-4188,00
DRAWN BY: LJP
CHECKED BY: CLS

SHEET TITLE:
LEVEL 1 &
LEVEL 2
FLOOR PLANS

R-102

J:\21-4188-00-RIVERS_LANDING_2016\ACAD\REST\4188_R102.DWG 2/29/2016 2:45:52 PM MASTEL, LISA

Copyright 2014. All rights reserved. No part of this document may be reproduced in any form or by any means without permission from Walker Parking Consultants/Engineers, Inc.

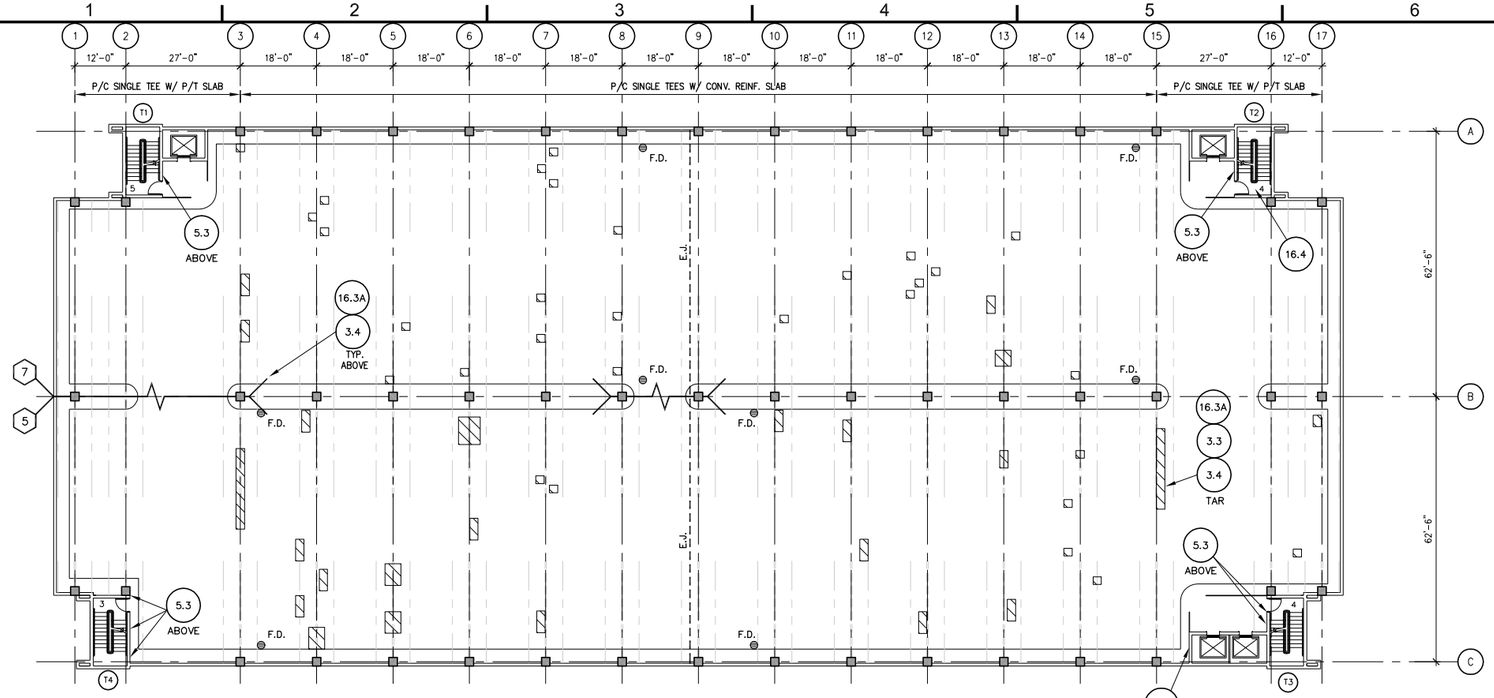

C1 LEVEL 4 FLOOR PLAN

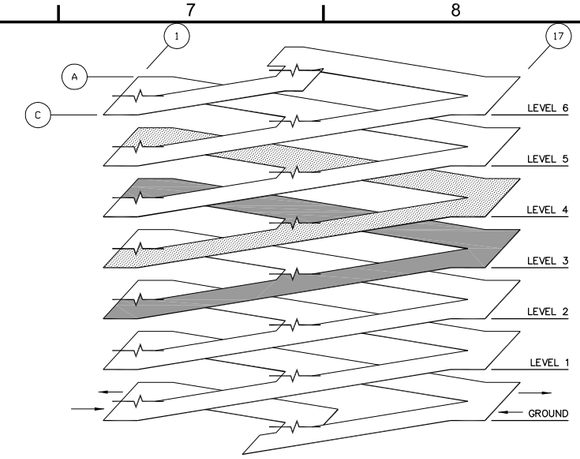

ISOMETRIC

SCOPE OF WORK THIS YEAR

Work is limited to the work items and quantities on the bid form. Location of work is graphically depicted on plan sheets. Owner reserves the right to increase or decrease bid quantities at the same unit price. All work items in Section 02000, details, and work items noted on plan sheets not on bid form shall be ignored.

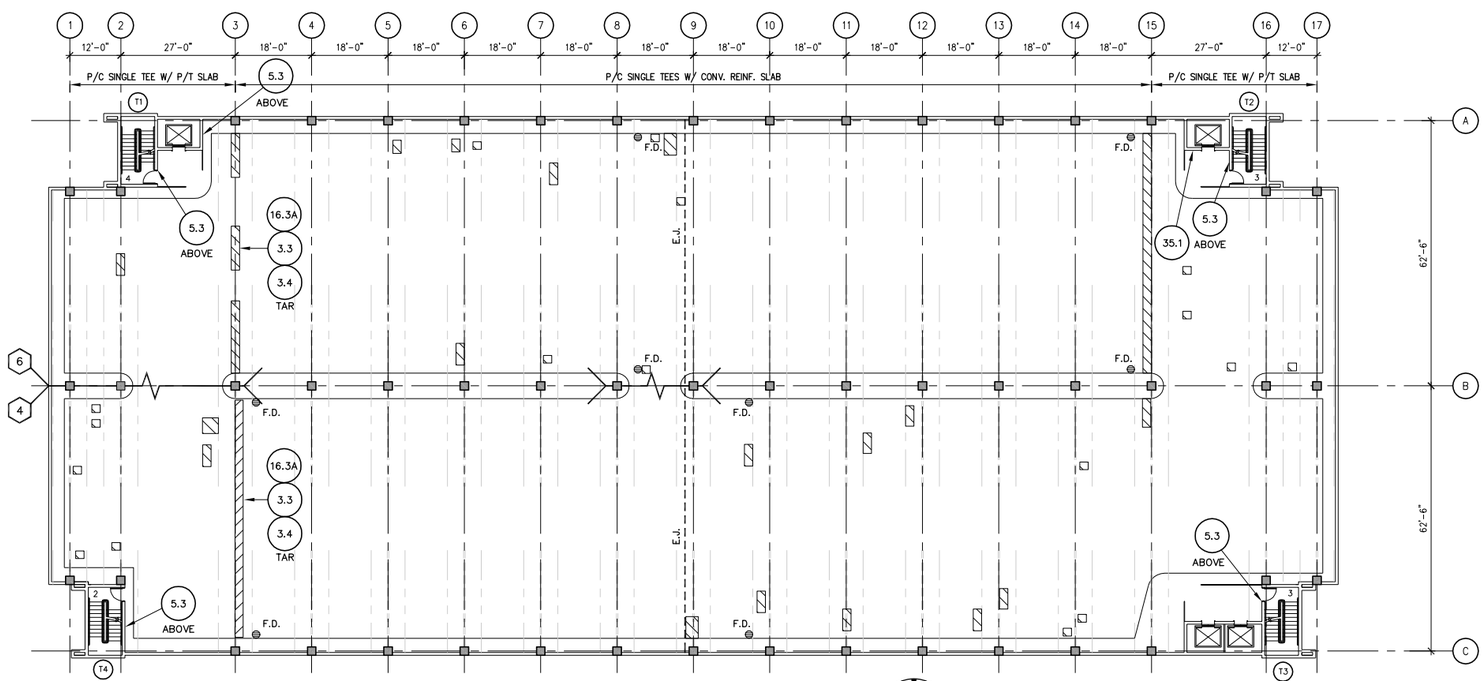

A1 LEVEL 3 FLOOR PLAN

NORTH

SHEET NOTES:

1. SPECIFIC LOCATIONS FOR WORK ITEMS 3.5, 3.6 AND RELATED POST-TENSIONING SYSTEM (WORK ITEM SERIES 21) REPAIRS HAVE NOT BEEN IDENTIFIED BUT ARE ANTICIPATED TO BE ENCOUNTERED DURING PERFORMANCE OF WORK ITEMS 3.3 OR 3.4. NOTIFY ENGINEER OF ANY FAILED, BROKEN, OR CORRODED POST-TENSIONING TENDONS OR ANNCHORS ENCOUNTERED. CONCRETE WORK RELATED TO POST-TENSION REPAIRS WILL BE PAID BY WI-3.5 OR 3.6 FOR CORRESPONDING CONDITION, AND POST-TENSIONING REPAIRS WILL BE PAIR BY RESPECTIVE WI SERIES 21 ITEM.

3.5
3.6
16.3A
21.0
TAR
GRIDS 1–3, 15–17

WALKER
RESTORATION CONSULTANTS
1660 South Highway 100
Suite 545
Minneapolis, MN 55416
952.595.3515 Tel
952.595.3518 Fax
www.walkerrestoration.com

LICENSED PROFESSIONAL ENGINEER
TERRENCE ARVID HAKKOLA
14501
IOWA

I HEREBY CERTIFY THAT THIS ENGINEERING DOCUMENT WAS PREPARED BY ME OR UNDER MY DIRECT PERSONAL SUPERVISION AND THAT I AM A DULY LICENSED PROFESSIONAL ENGINEER UNDER THE LAWS OF THE STATE OF IOWA.

PRINTED NAME:
TERRENCE A. HAKKOLA, P.E.
DATE: 02-12-2016

MY LICENSE RENEWAL DATE IS:
DECEMBER 31, 2017

DATE ISSUED: 02-12-2016

2016 RIVERS LANDING
PARKING FACILITIES REPAIRS PROJECT
SIOUX CITY IOWA

MARK	DATE	DESCRIPTION
	02-12-2016	CONSTRUCTION DOCUMENTS

ISSUE:

PROJECT NO: 21-4188,00
DRAWN BY: LJP
CHECKED BY: CLS

SHEET TITLE:
LEVEL 3 &
LEVEL 4
FLOOR PLANS

R-103

J:\21-4188-00-RIVERS_LANDING_2016\ACAD\REST\4188_R103.DWG 2/10/2016 3:01:33 PM MASTEL, LISA

Copyright 2014. All rights reserved. No part of this document may be reproduced in any form or by any means without permission from Walker Parking Consultants/Engineers, Inc.

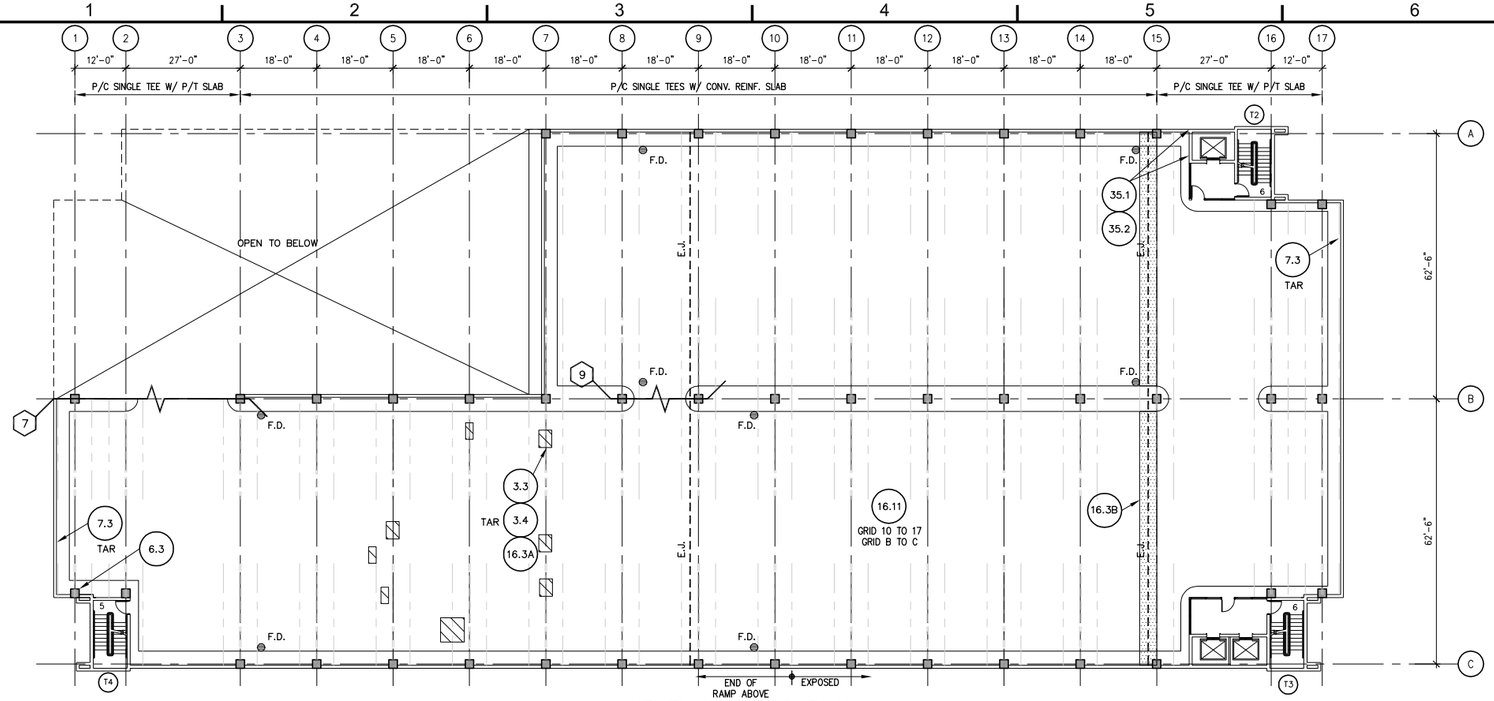

C1 LEVEL 6 FLOOR PLAN

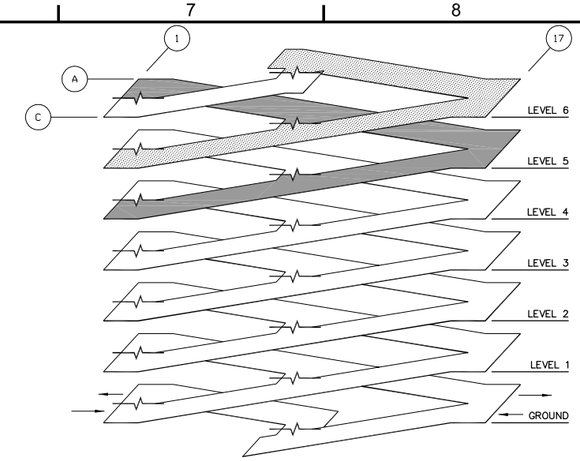

ISOMETRIC

SCOPE OF WORK THIS YEAR

Work is limited to the work items and quantities on the bid form. Location of work is graphically depicted on plan sheets. Owner reserves the right to increase or decrease bid quantities at the same unit price. All work items in Section 02000, details, and work items noted on plan sheets not on bid form shall be ignored.

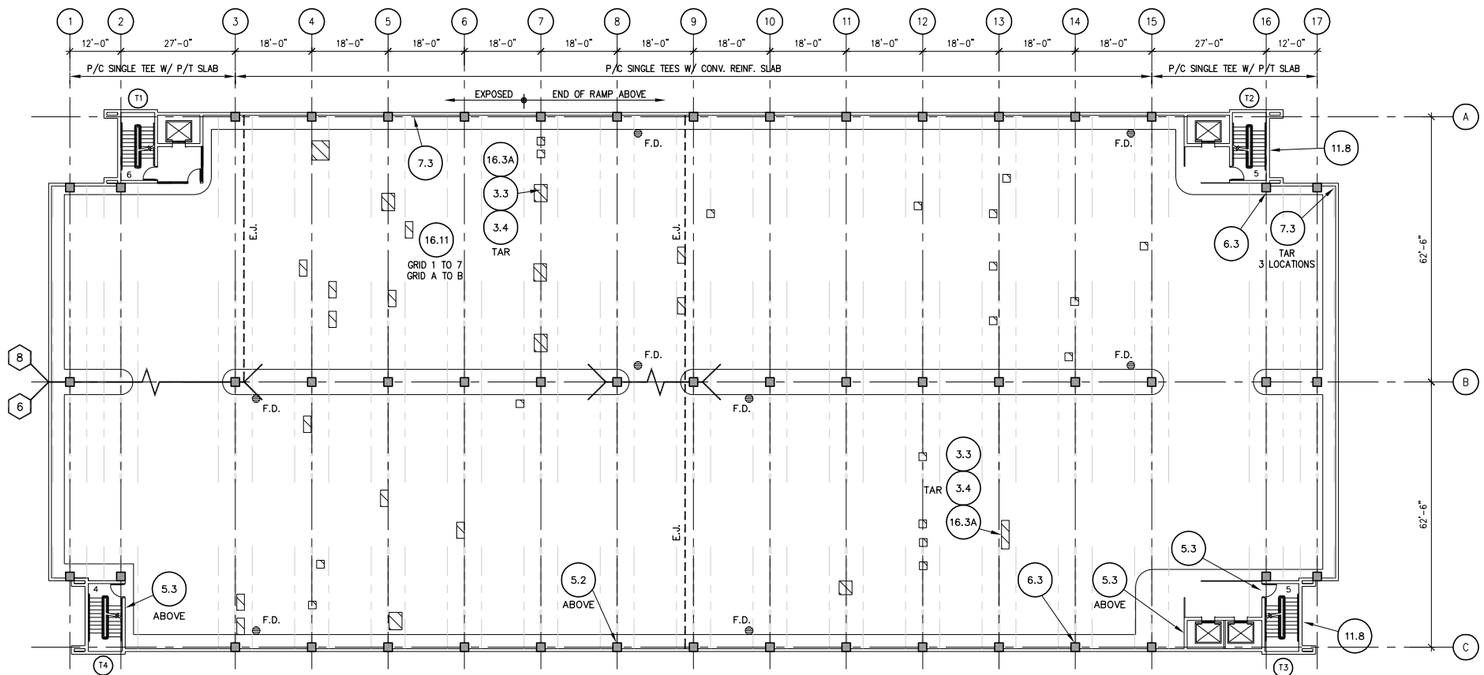

A1 LEVEL 5 FLOOR PLAN

NORTH

SHEET NOTES:

1. SPECIFIC LOCATIONS FOR WORK ITEMS 3.5, 3.6 AND RELATED POST-TENSIONING SYSTEM (WORK ITEM SERIES 21) REPAIRS HAVE NOT BEEN IDENTIFIED BUT ARE ANTICIPATED TO BE ENCOUNTERED DURING PERFORMANCE OF WORK ITEMS 3.3 OR 3.4. NOTIFY ENGINEER OF ANY FAILED, BROKEN, OR CORRODED POST-TENSIONING TENDONS OR ANNCHORS ENCOUNTERED. CONCRETE WORK RELATED TO POST-TENSION REPAIRS WILL BE PAID BY WI-3.5 OR 3.6 FOR CORRESPONDING CONDITION, AND POST-TENSIONING REPAIRS WILL BE PAIR BY RESPECTIVE WI SERIES 21 ITEM.

3.5
3.6
16.3A
21.0
TAR
GRIDS 1-3, 15-17

WALKER
RESTORATION CONSULTANTS
1660 South Highway 100
Suite 545
Minneapolis, MN 55416
952.595.3515 Tel
952.595.3518 Fax
www.walkerrestoration.com

LICENSED PROFESSIONAL ENGINEER
TERRENCE ARVO HAKKOLA
14501
IOWA

I HEREBY CERTIFY THAT THIS ENGINEERING DOCUMENT WAS PREPARED BY ME OR UNDER MY DIRECT PERSONAL SUPERVISION AND THAT I AM A DULY LICENSED PROFESSIONAL ENGINEER UNDER THE LAWS OF THE STATE OF IOWA.

PRINTED NAME:
TERRENCE A. HAKKOLA, P.E.
DATE: 02-12-2016

MY LICENSE RENEWAL DATE IS:
DECEMBER 31, 2017

DATE ISSUED: 02-12-2016

2016 RIVERS LANDING PARKING FACILITIES REPAIRS PROJECT

SIOUX CITY IOWA

MARK	DATE	DESCRIPTION
	02-12-2016	CONSTRUCTION DOCUMENTS

ISSUE:

PROJECT NO: 21-4188,00
DRAWN BY: LJP
CHECKED BY: RJE

SHEET TITLE:
LEVEL 5 &
LEVEL 6
FLOOR PLAN

R-104

J:\214188-00-RIVERS_LANDING_2016\ACAD\REST4188_R104.DWG 2/10/2016 3:01:29 PM MASTEL, LISA

Copyright 2014. All rights reserved. No part of this document may be reproduced in any form or by any means without permission from Walker Parking Consultants/Engineers, Inc.

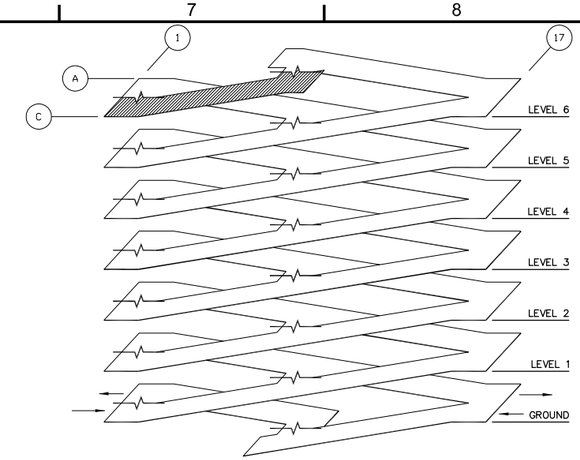

ISOMETRIC

SCOPE OF WORK THIS YEAR

Work is limited to the work items and quantities on the bid form. Location of work is graphically depicted on plan sheets. Owner reserves the right to increase or decrease bid quantities at the same unit price. All work items in Section 02000, details, and work items noted on plan sheets not on bid form shall be ignored.

SHEET NOTES:

1. SPECIFIC LOCATIONS FOR WORK ITEMS 3.5, 3.6 AND RELATED POST-TENSIONING SYSTEM (WORK ITEM SERIES 21) REPAIRS HAVE NOT BEEN IDENTIFIED BUT ARE ANTICIPATED TO BE ENCOUNTERED DURING PERFORMANCE OF WORK ITEMS 3.3 OR 3.4. NOTIFY ENGINEER OF ANY FAILED, BROKEN, OR CORRODED POST-TENSIONING TENDONS OR ANNCHORS ENCOUNTERED. CONCRETE WORK RELATED TO POST-TENSION REPAIRS WILL BE PAID BY WI-3.5 OR 3.6 FOR CORRESPONDING CONDITION, AND POST-TENSIONING REPAIRS WILL BE PAIR BY RESPECTIVE WI SERIES 21 ITEM.

3.5
3.6
16.3A
21.0
TAR
GRIDS 1–3, 15–17

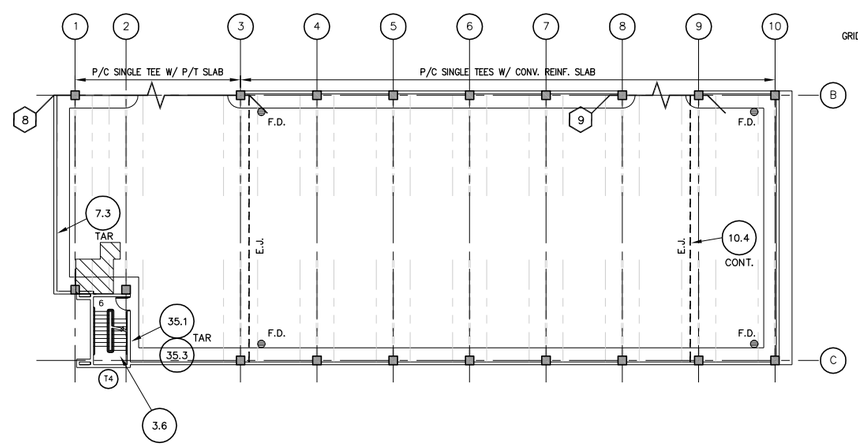

A4 PARTIAL TOP LEVEL FLOOR PLAN

WALKER
RESTORATION CONSULTANTS
1660 South Highway 100
Suite 545
Minneapolis, MN 55416
952.595.9415 Ph
952.595.9518 Fax
www.walkerrestoration.com

LICENSED PROFESSIONAL ENGINEER
TERRENCE ARVO HAKKOLA
14507
IOWA

I HEREBY CERTIFY THAT THIS ENGINEERING DOCUMENT WAS PREPARED BY ME OR UNDER MY DIRECT PERSONAL SUPERVISION AND THAT I AM A DULY LICENSED PROFESSIONAL ENGINEER UNDER THE LAWS OF THE STATE OF IOWA.

PRINTED NAME:
TERRENCE A. HAKKOLA, P.E.
DATE: 02-12-2016

MY LICENSE RENEWAL DATE IS:
DECEMBER 31, 2017

DATE ISSUED: 02-12-2016

2016 RIVERS LANDING
PARKING FACILITIES REPAIRS PROJECT
SIOUX CITY IOWA

MARK	DATE	DESCRIPTION
	02-12-2016	CONSTRUCTION DOCUMENTS

ISSUE:

PROJECT NO: 21-4188.00
DRAWN BY: LJP
CHECKED BY: CLS

SHEET TITLE:
PARTIAL TOP LEVEL FLOOR PLAN

R-105

J:\21-4188-00-RIVERS_LANDING_2016\ACAD\REST4188_R105.DWG 2/10/2016 3:01:24 PM MASTEL, LISA

Copyright 2014. All rights reserved. No part of this document may be reproduced in any form or by any means without permission from Walker Parking Consultants/Engineers, Inc.

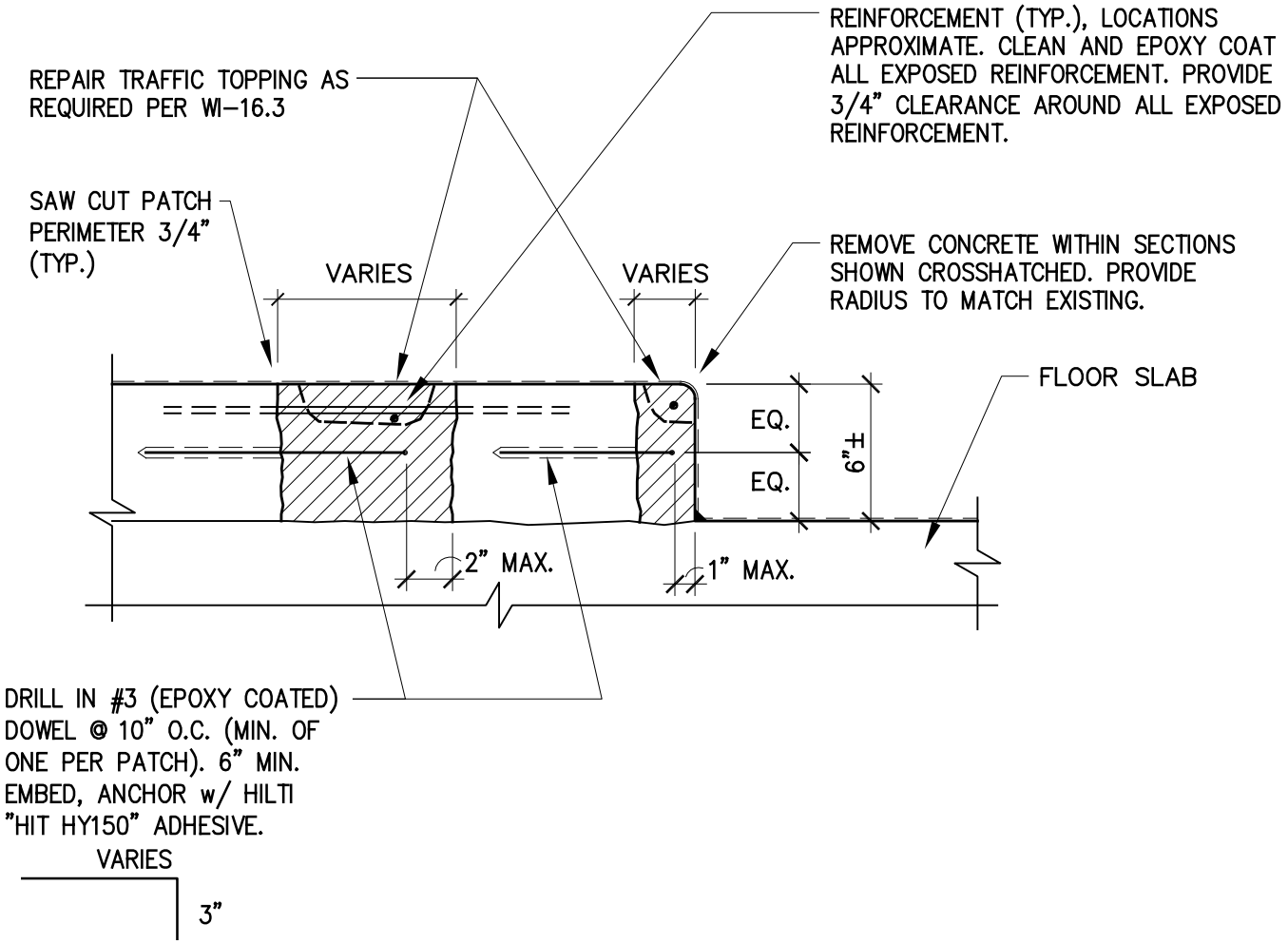

NOTES:

1. SEE WORK ITEM SPECIFICATION FOR ADDITIONAL INFORMATION.
2. CURB REINFORCEMENT MAY DIFFER FROM ACTUAL FIELD CONDITIONS.
3. CONCRETE PATCH TO BE FLUSH WITH SURROUNDING CONCRETE, NOT FLUSH WITH EXISTING TRAFFIC TOPPING. AFTER CONCRETE PATCH IS CURED REPAIR TRAFFIC TOPPING PER WI-16.3.

3.0.1

FLOOR REPAIRS

Copyright 2016. All rights reserved. No part of this document may be reproduced in any form or by any means without permission from Walker Parking Consultants/Engineers, Inc.

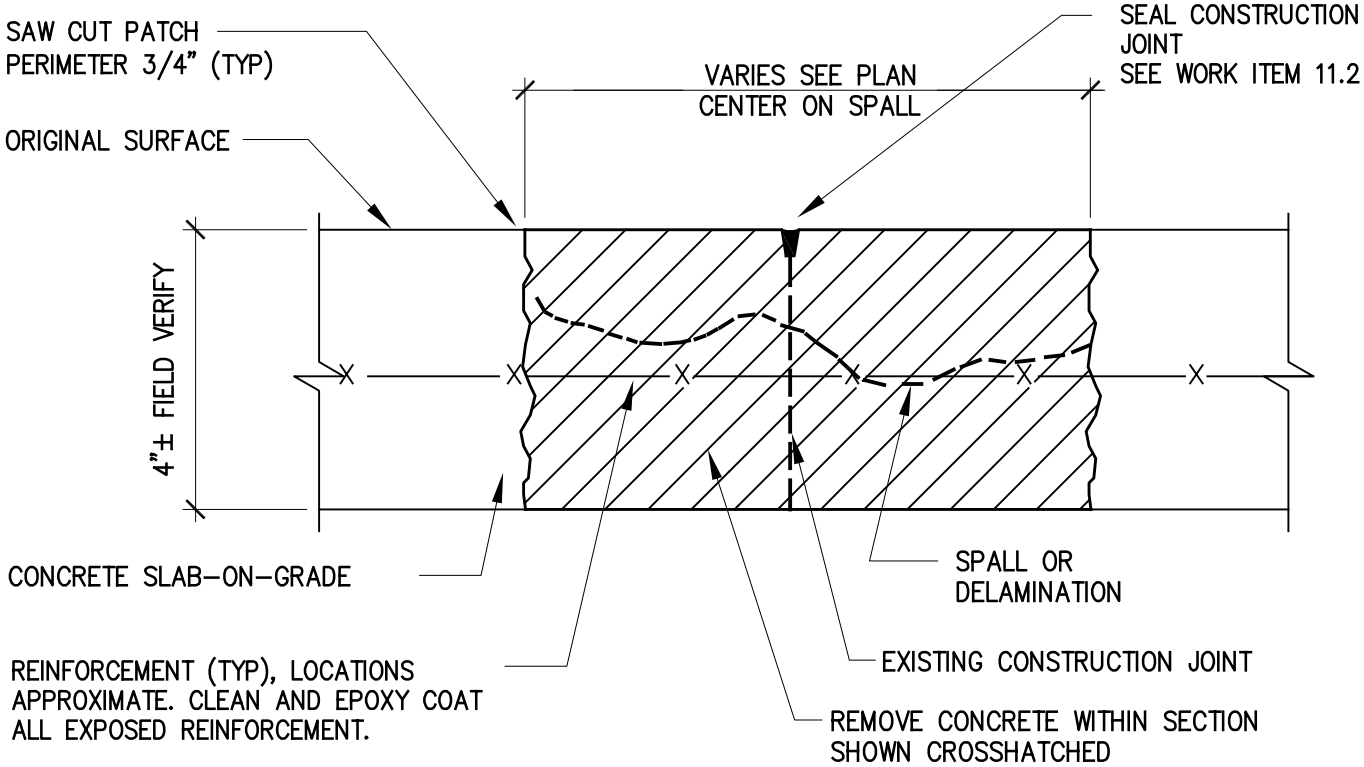

NOTES:

1. SEE WORK ITEM SPECIFICATION FOR ADDITIONAL INFORMATION.

3.2.0 FLOOR REPAIR - SLAB-ON-GRADE

Copyright 2016. All rights reserved. No part of this document may be reproduced in any form or by any means without permission from Walker Parking Consultants/Engineers, Inc.

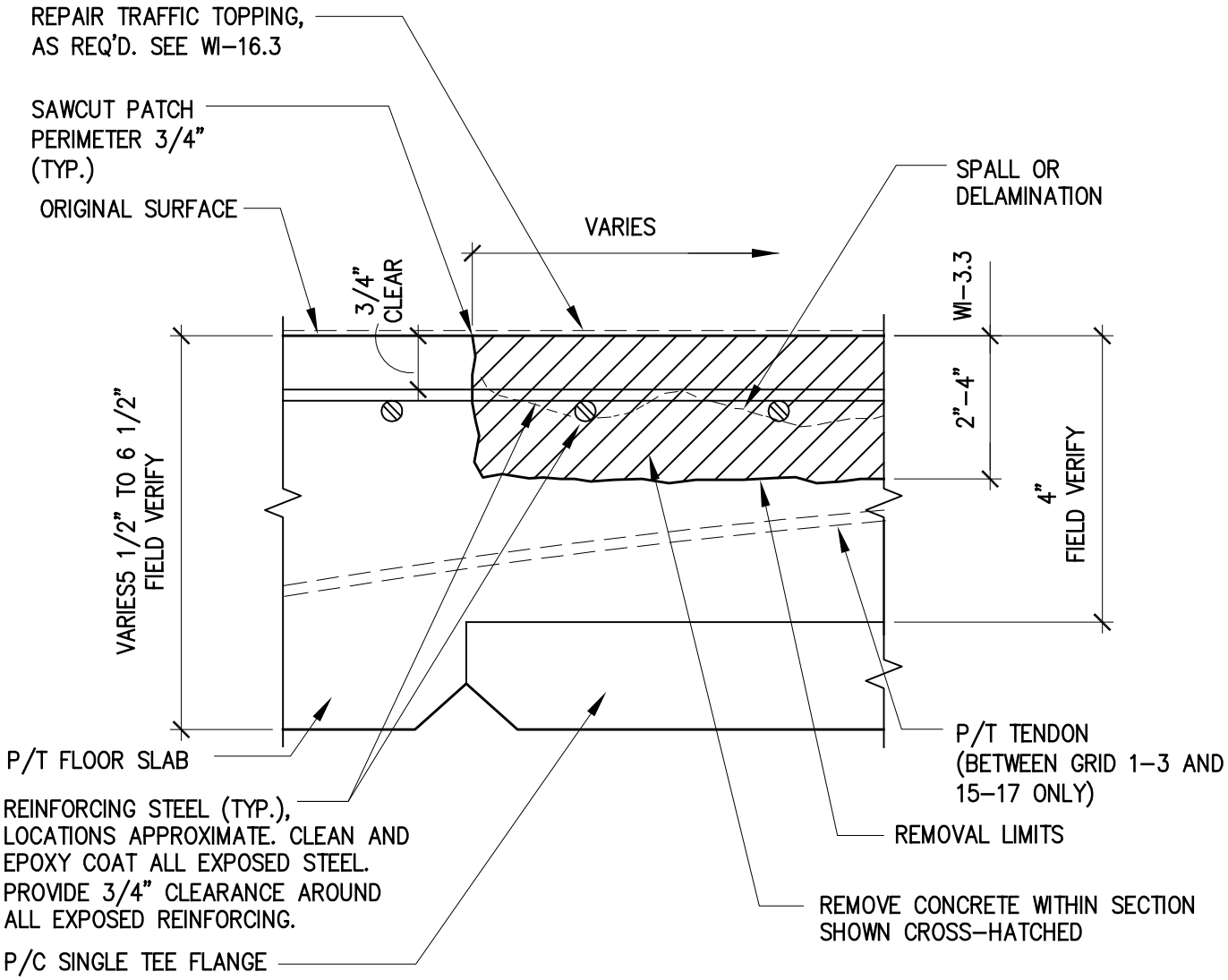

NOTE:

1. CONCRETE PATCH TO BE FLUSH WITH SURROUNDING CONCRETE, NOT FLUSH WITH EXISTING TRAFFIC TOPPING. AFTER PATCHING TRAFFIC TOPPING IS TO BE REPAIRED PER WI-16.3.

CAUTION:
FLOOR SLAB HAS POST-TENSIONING TENDONS. THESE TENDONS ARE NEAR FLOOR SURFACE AT SPALLS, DELAMINATIONS, AND OVER P/C SINGLE TEE FLANGE. CONTRACTOR SHALL EXERCISE EXTREME CAUTION WHEN SAW CUTTING AND REMOVING CONCRETE SO AS NOT TO DAMAGE EXISTING TENDONS OR TENDON SHEATHING. TENDONS MAY BREAK WITH EXPLOSIVE FORCE WHEN CUT. CHIPPING WITH 15 LB HAMMERS SHALL BE USED IN LIEU OF SAW CUTTING NEAR SHALLOW TENDONS.

3.3.0

FLOOR REPAIR - PARTIAL DEPTH

Copyright 2016. All rights reserved. No part of this document may be reproduced in any form or by any means without permission from Walker Parking Consultants/Engineers, Inc.

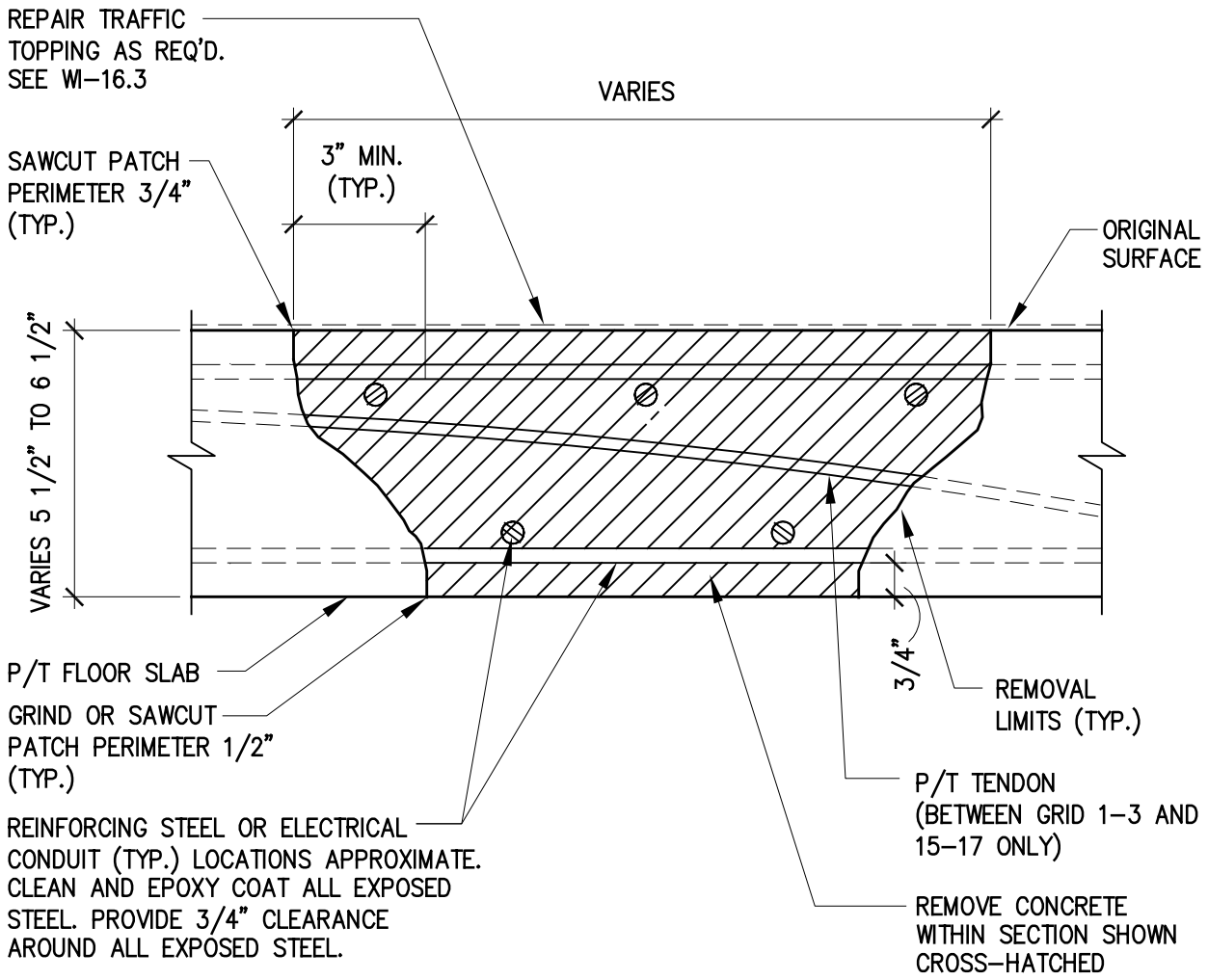

NOTE:

1. CONCRETE PATCH TO BE FLUSH WITH SURROUNDING CONCRETE, NOT FLUSH WITH EXISTING TRAFFIC TOPPING. AFTER PATCHING TRAFFIC TOPPING IS TO BE REPAIRED PER WI-16.3.

CAUTION:
FLOOR SLAB HAS POST-TENSIONING TENDONS. THESE TENDONS ARE NEAR FLOOR SURFACE AT SPALLS, DELAMINATIONS, AND OVER P/C SINGLE TEE FLANGE. CONTRACTOR SHALL EXERCISE EXTREME CAUTION WHEN SAW CUTTING AND REMOVING CONCRETE SO AS NOT TO DAMAGE EXISTING TENDONS OR TENDON SHEATHING. TENDONS MAY BREAK WITH EXPLOSIVE FORCE WHEN CUT. CHIPPING WITH 15 LB HAMMERS SHALL BE USED IN LIEU OF SAW CUTTING NEAR SHALLOW TENDONS.

3.4.0

FLOOR REPAIR - FULL DEPTH

Copyright 2016. All rights reserved. No part of this document may be reproduced in any form or by any means without permission from Walker Parking Consultants/Engineers, Inc.

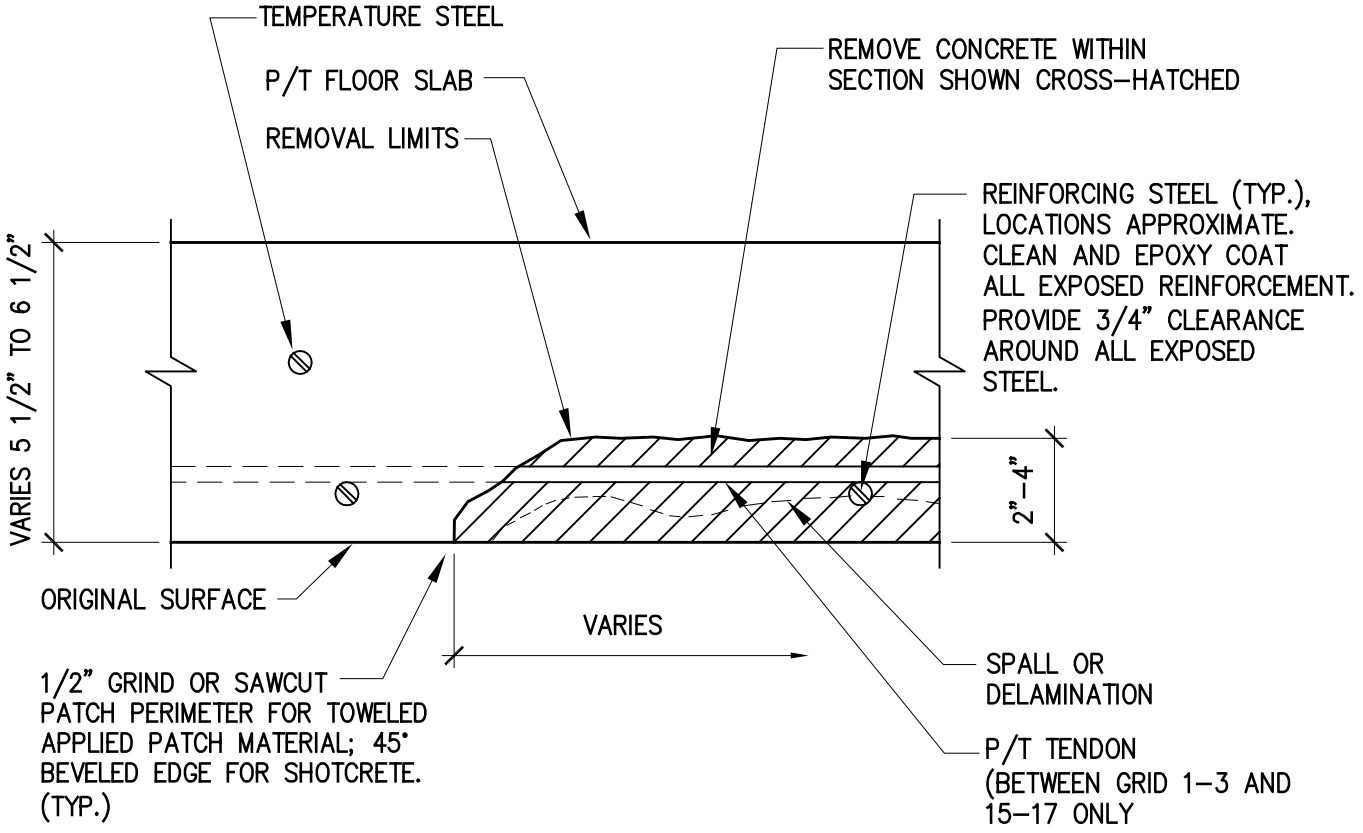

CAUTION:
FLOOR SLAB HAS POST-TENSIONING TENDONS. THESE TENDONS ARE NEAR CEILING SURFACE AT SPALLS AND DELAMINATIONS. CONTRACTOR SHALL EXERCISE EXTREME CAUTION WHEN SAW CUTTING AND REMOVING CONCRETE SO AS NOT TO DAMAGE EXISTING TENDONS OR TENDON SHEATHING. TENDONS MAY BREAK WITH EXPLOSIVE FORCE WHEN CUT. CHIPPING WITH 15 LB HAMMERS SHALL BE USED IN LIEU OF SAW CUTTING NEAR SHALLOW TENDONS.

4.3.0 CEILING REPAIR - PARTIAL DEPTH

Copyright 2016. All rights reserved. No part of this document may be reproduced in any form or by any means without permission from Walker Parking Consultants/Engineers, Inc.

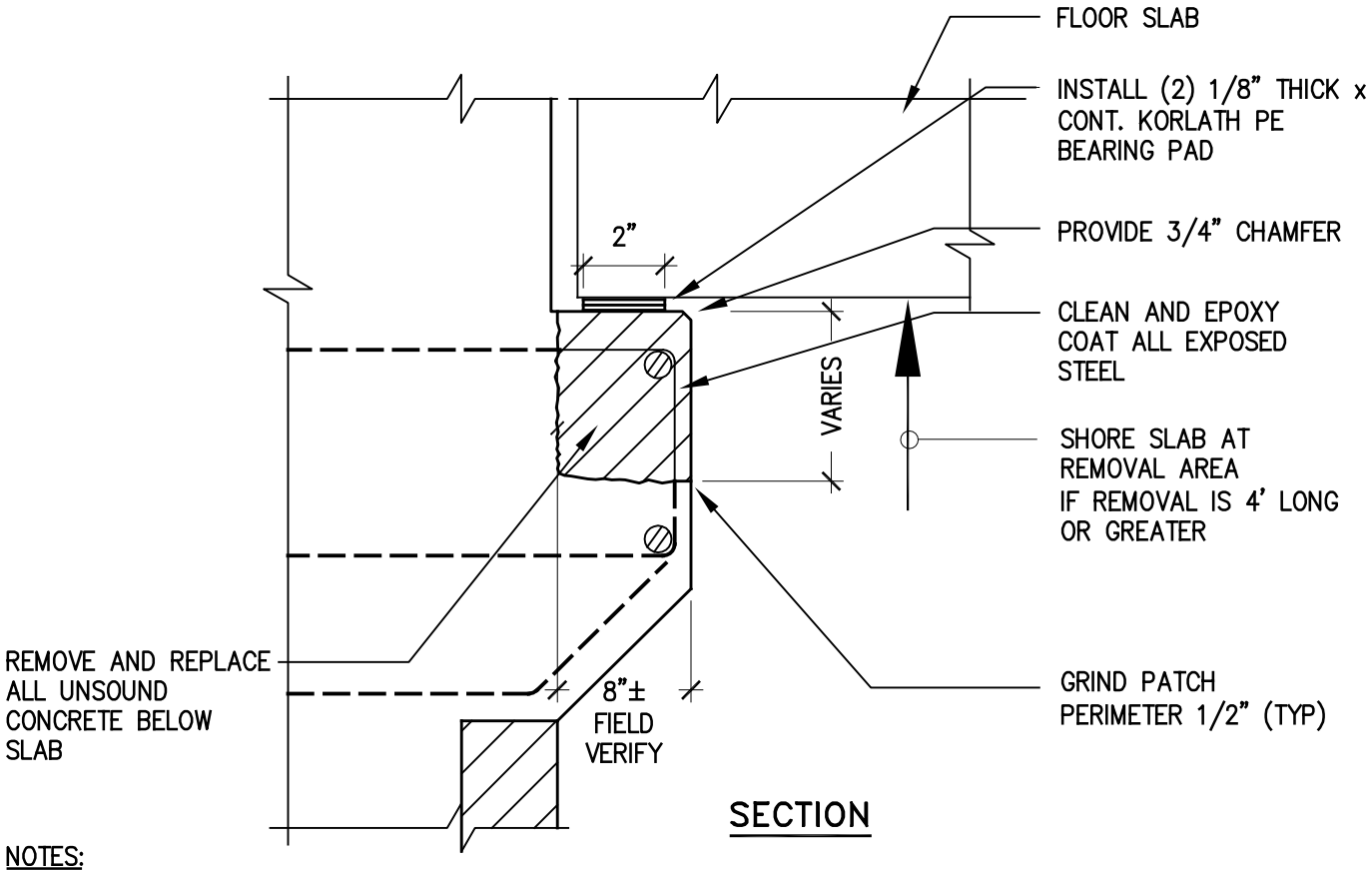

NOTES:

1. NUMBER AND LOCATION OF REINFORCEMENT SHOWN MAY DIFFER FROM ACTUAL FIELD CONDITIONS.
2. FORM AND POUR LEDGE. RESTORE TO ORIGINAL CONDITION AND APPEARANCE.

5.3.0

BEAM REPAIRS - HAUNCH

Copyright 2016. All rights reserved. No part of this document may be reproduced in any form or by any means without permission from Walker Parking Consultants/Engineers, Inc.

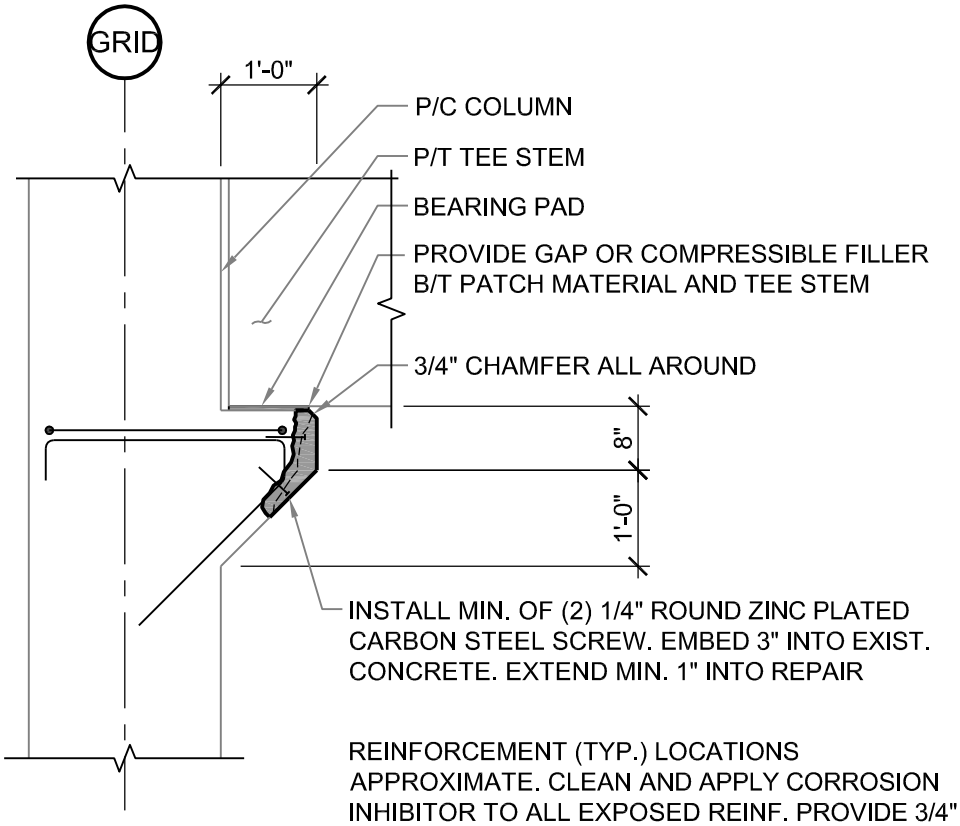

REINFORCEMENT (TYP.) LOCATIONS APPROXIMATE. CLEAN AND APPLY CORROSION INHIBITOR TO ALL EXPOSED REINF. PROVIDE 3/4" CLEARANCE AROUND ALL EXPOSED REINF. WHERE REQ'D AS SPECIFIED IN SECTION "SURFACE PREPARATION FOR PATCHING".

NOTE:
SEE DETAIL 6.1 FOR ADDITIONAL INFORMATION.

6.3.0 COLUMN REPAIR - HAUNCH

Copyright 2016. All rights reserved. No part of this document may be reproduced in any form or by any means without permission from Walker Parking Consultants/Engineers, Inc.

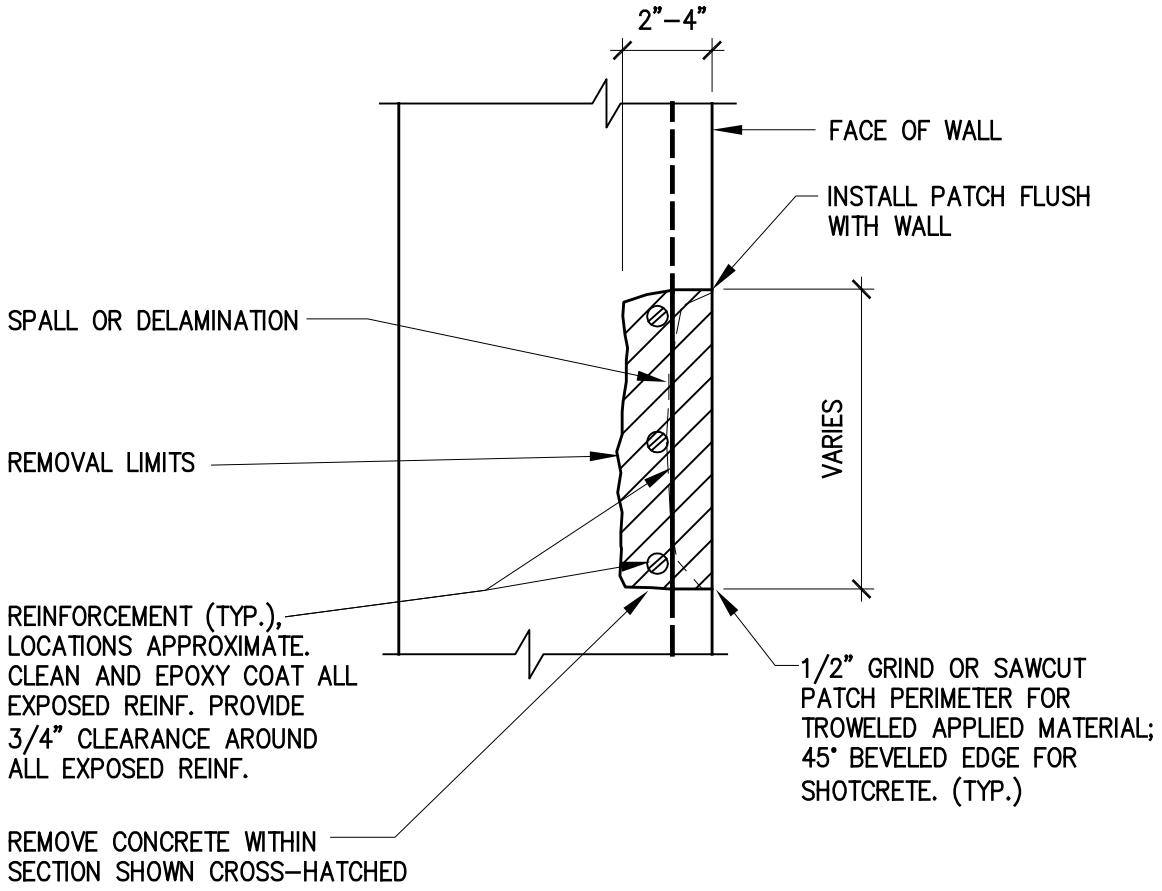

7.3.0

WALL REPAIR-PARTIAL DEPTH/SHALLOW

Copyright 2016. All rights reserved. No part of this document may be reproduced in any form or by any means without permission from Walker Parking Consultants/Engineers, Inc.

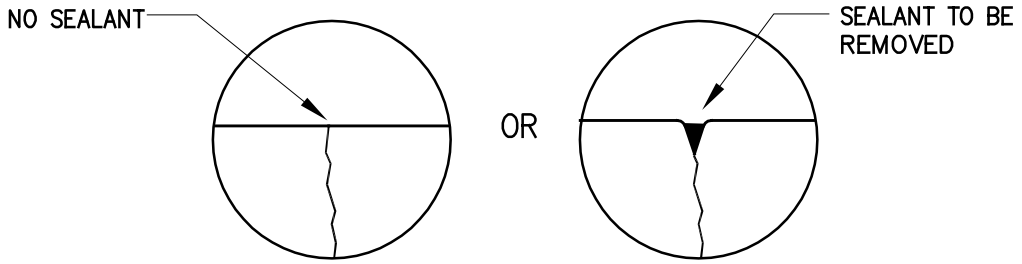

EXISTING CONDITION

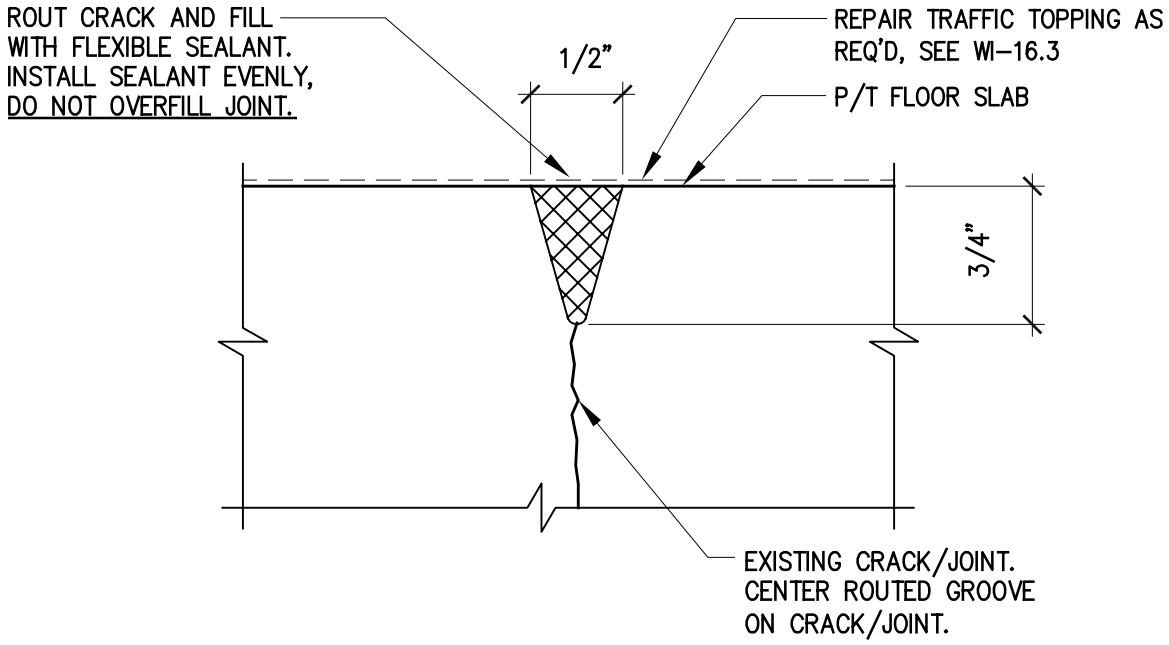

11.1.0

SEAL CRACKS

("INCIDENTAL")

Copyright 2016. All rights reserved. No part of this document may be reproduced in any form or by any means without permission from Walker Parking Consultants/Engineers, Inc.

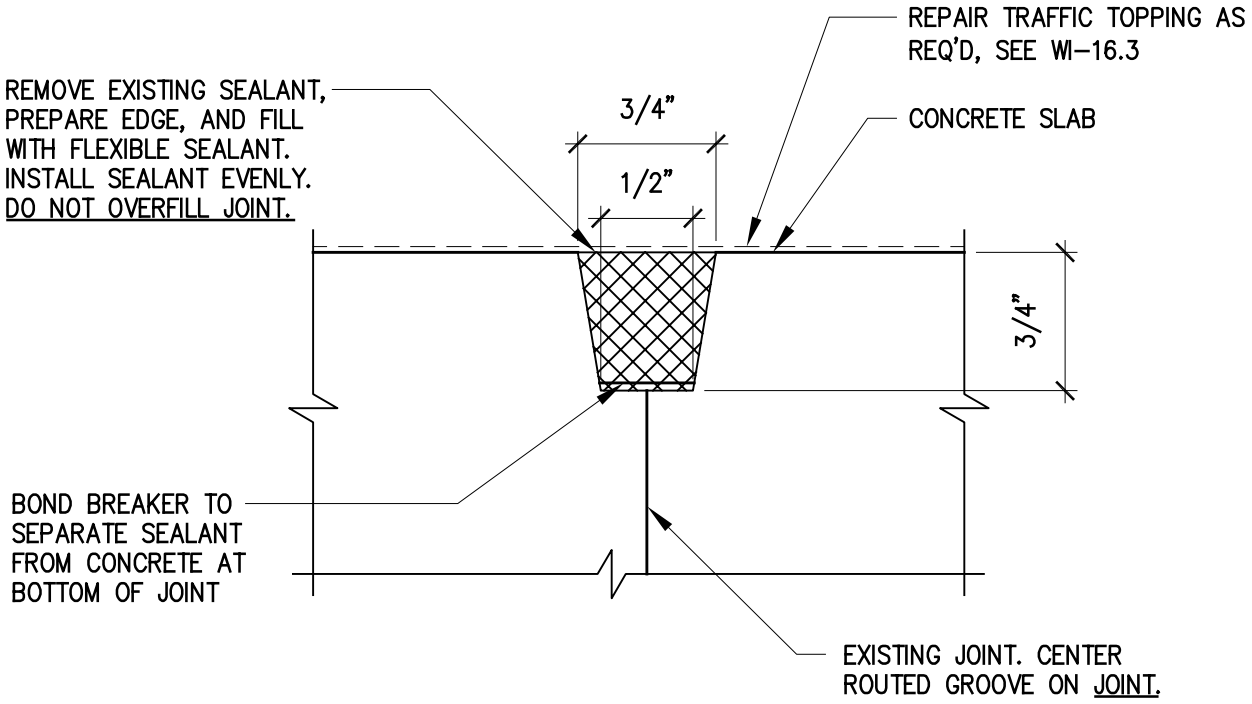

11.2.0

REPAIR CONSTRUCTION JOINTS

Copyright 2016. All rights reserved. No part of this document may be reproduced in any form or by any means without permission from Walker Parking Consultants/Engineers, Inc.

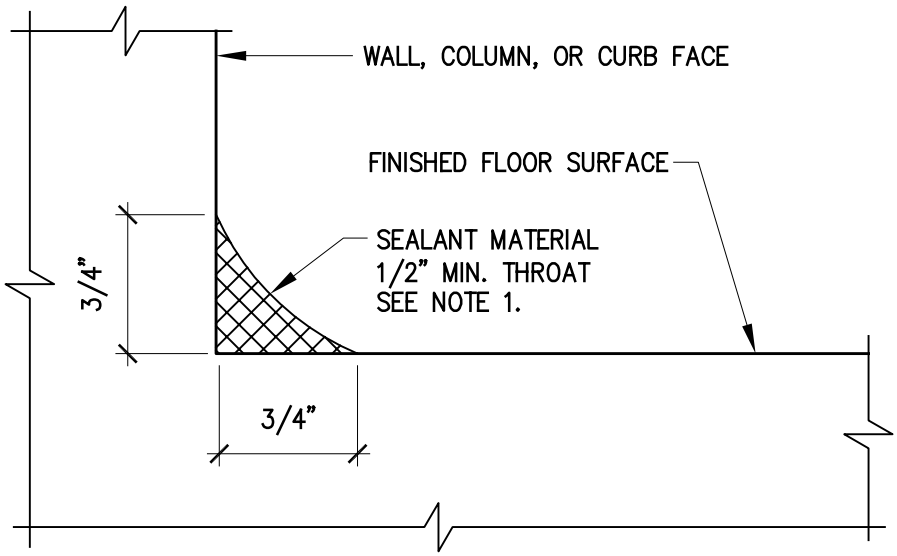

NOTE:

1. REMOVE EXISTING COVE SEALANT MATERIAL. PREPARE SURFACE PER SPECIFICATIONS.

11.7.0

COVE SEALANT

("INCIDENTAL")

Copyright 2016. All rights reserved. No part of this document may be reproduced in any form or by any means without permission from Walker Parking Consultants/Engineers, Inc.

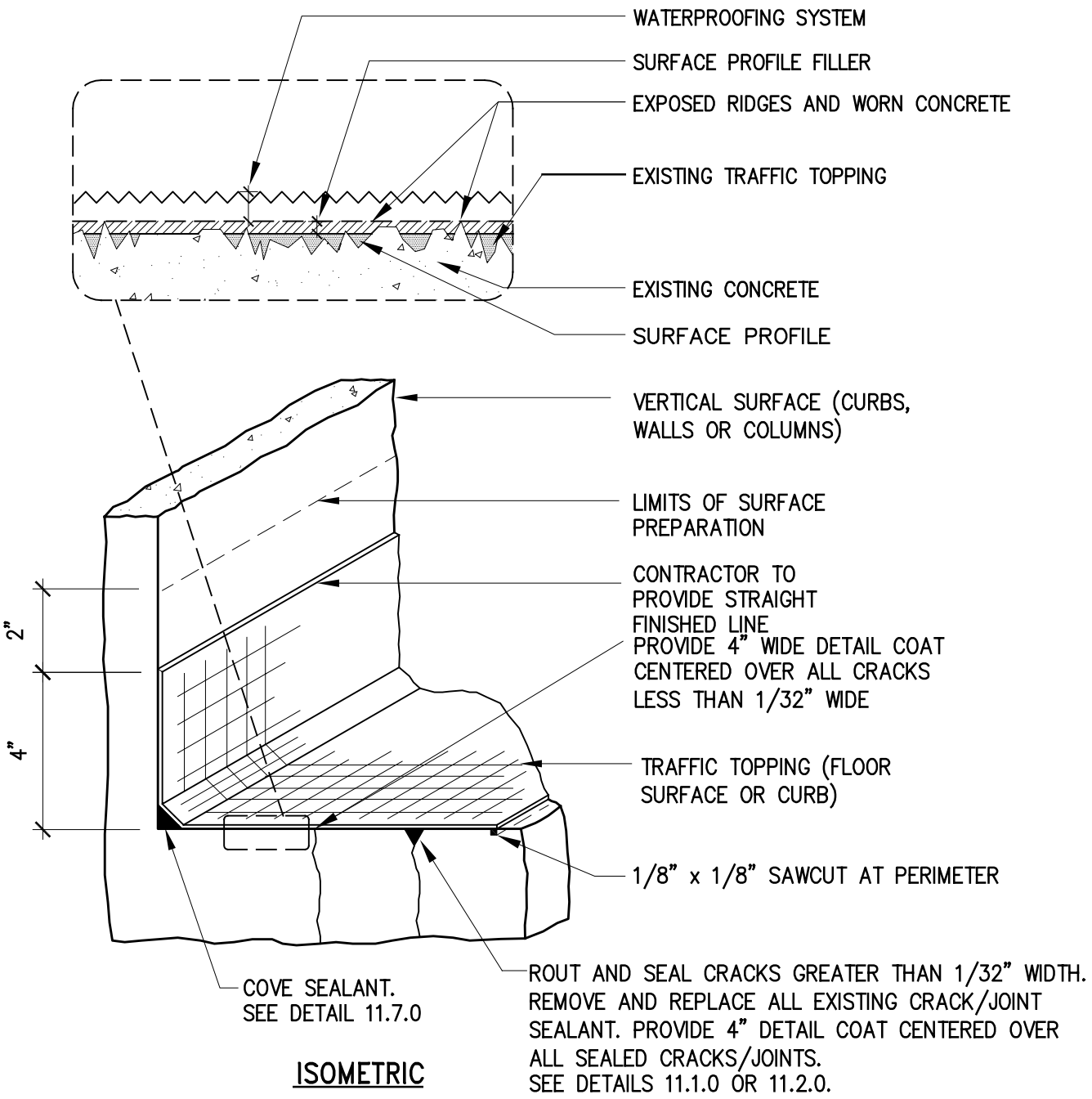

ISOMETRIC

NOTE:

1. QUANTITIES BASED ON HORIZONTAL APPLICATION AREA. VERTICAL DETAILING, ADDITIONAL DETAIL COAT OVER CRACKS, ROUTING AND SEALING CRACKS, INSTALLATION OF COVE SEALANT, AND REMOVAL AND REPLACEMENT OF EXISTING SEALANTS ARE PAID SEPARATE.

2. SEE DETAIL 16.3.1 FOR FURTHER INFORMATION REGARDING TRAFFIC TOPPING AT PATCH AREAS.

TRAFFIC TOPPING - RECOAT AT REPAIR (COMPLETE SYSTEM)

16.3.0

Copyright 2016. All rights reserved. No part of this document may be reproduced in any form or by any means without permission from Walker Parking Consultants/Engineers, Inc.

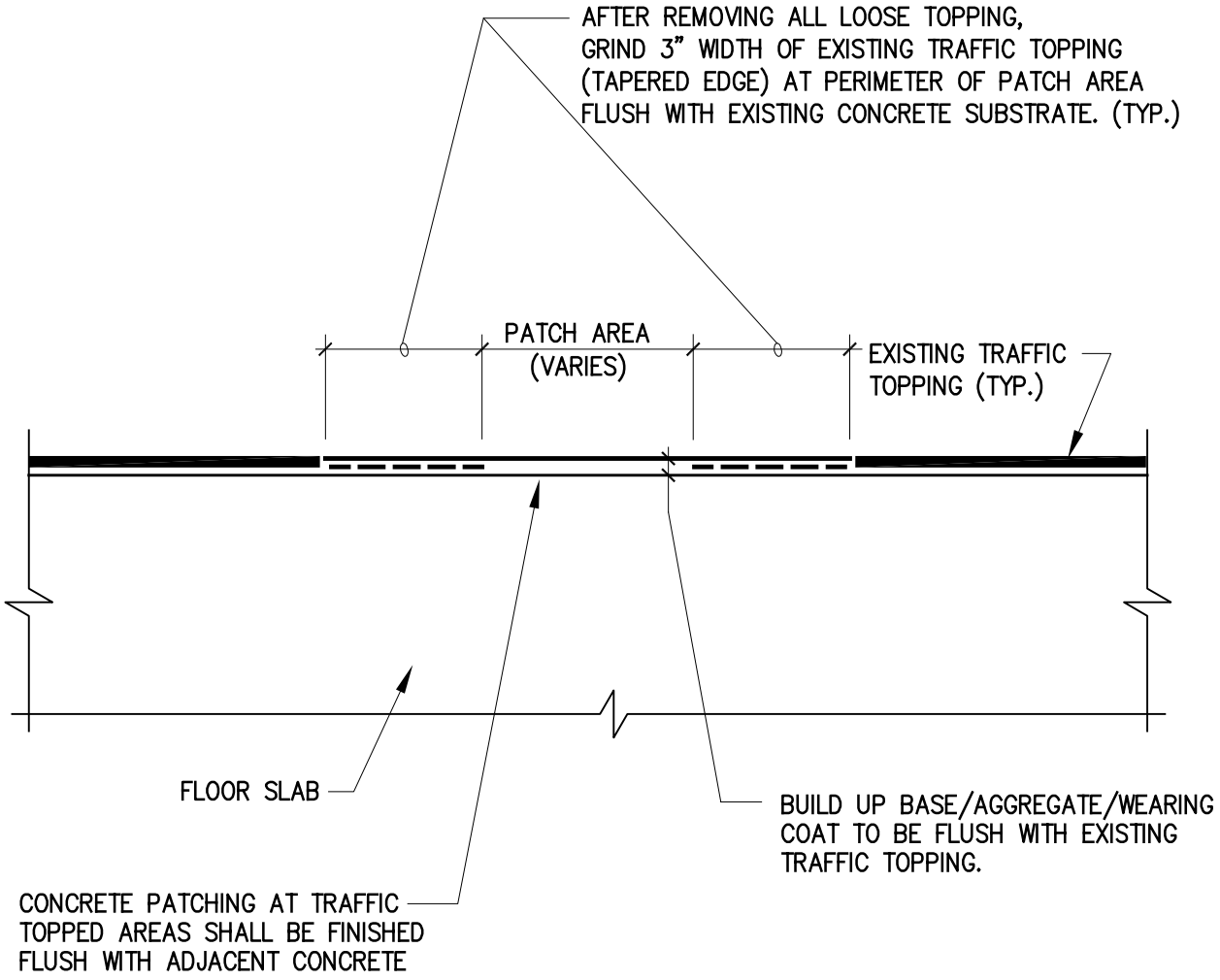

NOTE:

1. SEE DETAIL 16.3.0 FOR ADDITIONAL INFORMATION.

TRAFFIC TOPPING - RECOAT AT REPAIRS (COMPLETE SYSTEM

16.3.1

("FOR CLARIFICATION ONLY")

Copyright 2016. All rights reserved. No part of this document may be reproduced in any form or by any means without permission from Walker Parking Consultants/Engineers, Inc.

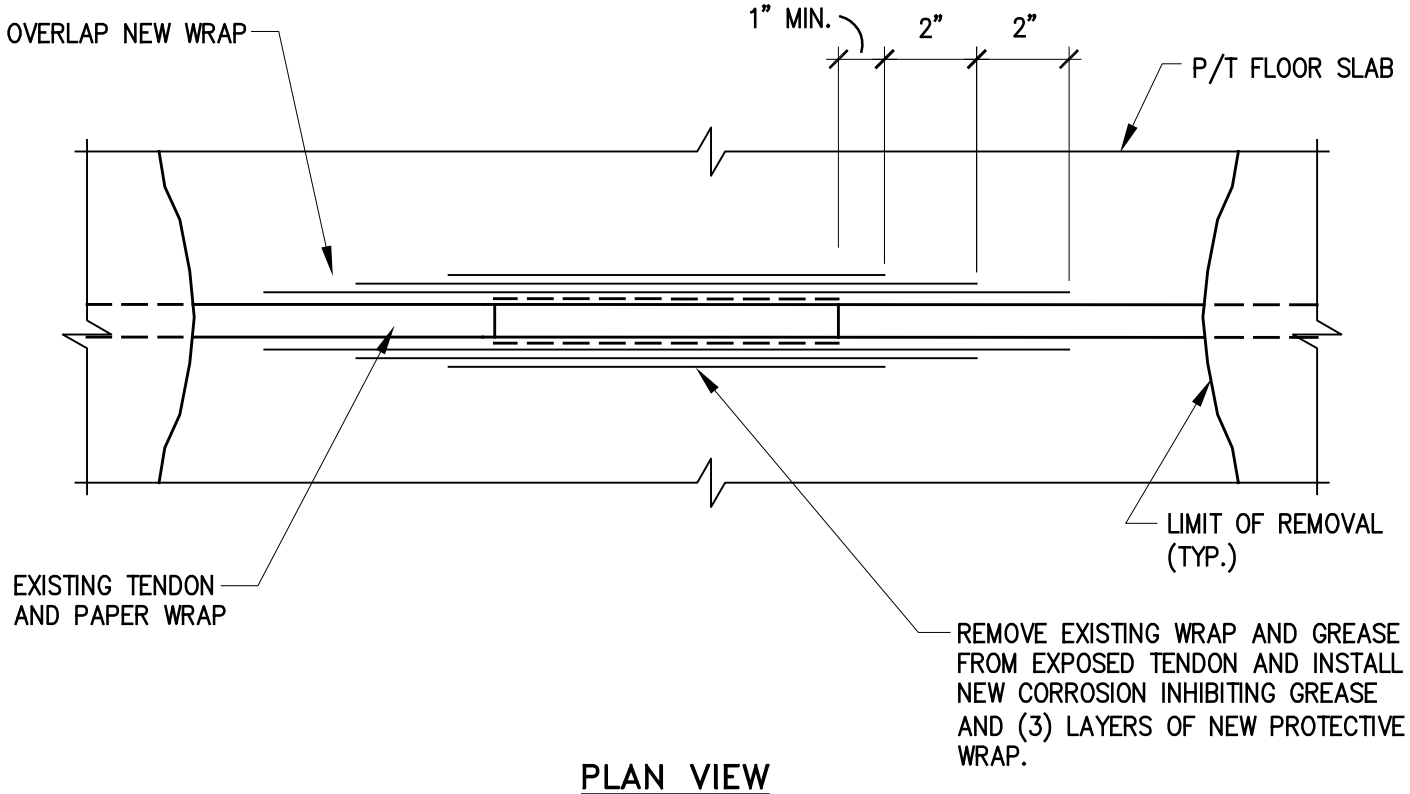

PLAN VIEW

21.2.0

PROTECT EXPOSED P/T TENDONS

("INCIDENTAL")

Copyright 2016. All rights reserved. No part of this document may be reproduced in any form or by any means without permission from Walker Parking Consultants/Engineers, Inc.

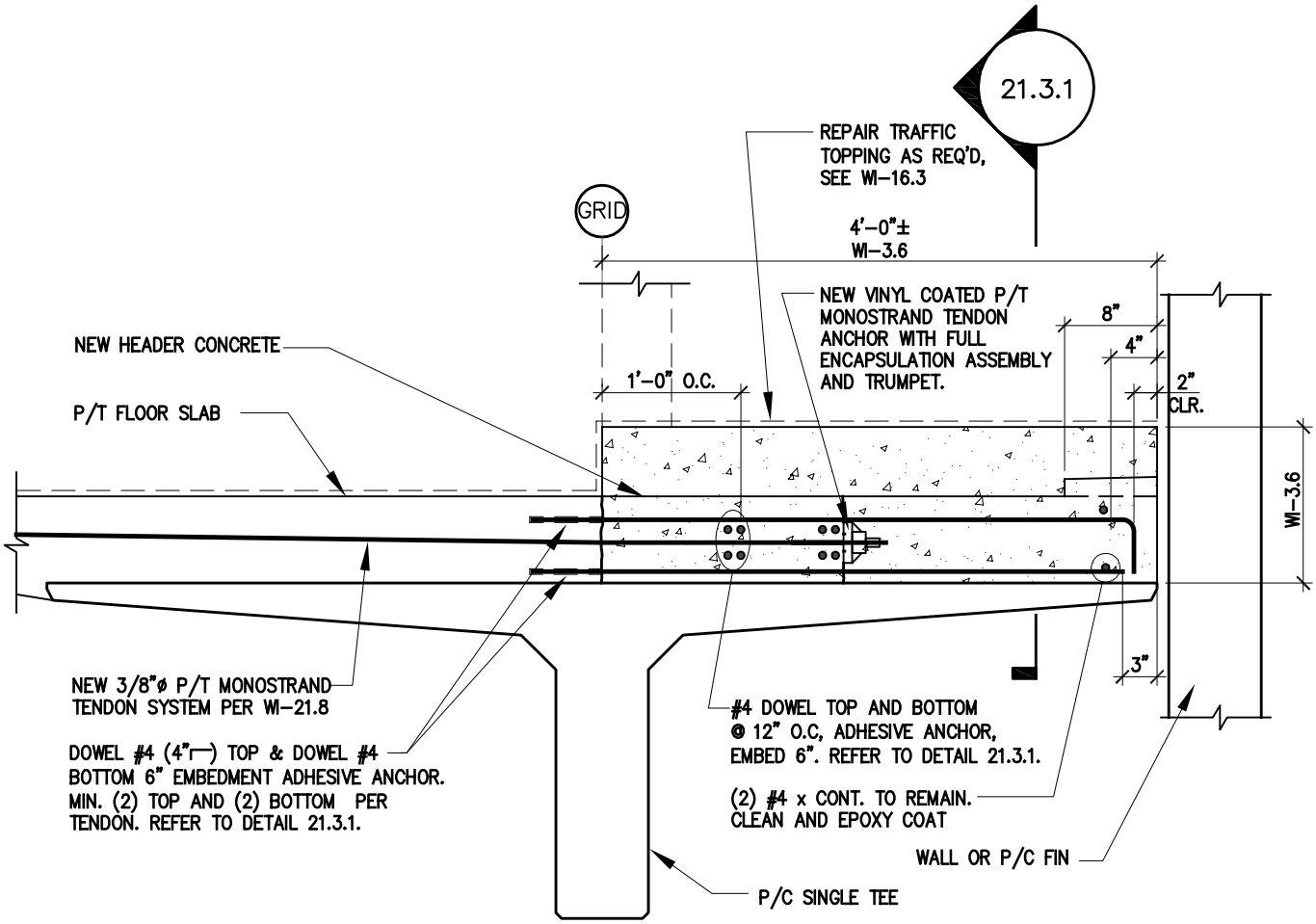

NOTES:

1. REFER TO DETAIL 21.2.0 AND 21.3.1 FOR ADDITIONAL INFORMATION.
2. CONCRETE REPAIR AND REINFORCEMENT SHALL BE PAID FOR AS PART OF WORK ITEM 3.6.
3. STRESS NEW TENDONS AFTER NEW HEADER CONCRETE "IN FRONT OF" LIVE AND DEAD ENDS HAS REACHED A MINIMUM OF 3500 PSI COMPRESSIVE STRENGTH.
4. MAINTAIN SHORING UNTIL WORK ITEM 3.6 IS COMPLETE.
5. CONCRETE PATCH TO BE FLUSH WITH SURROUNDING CONCRETE, NOT FLUSH WITH EXISTING TRAFFIC TOPPING. AFTER CONCRETE PATCH IS CURED REPAIR TRAFFIC TOPPING PER WI-16.3.

21.3.0

REPLACE P/T (LIVE) END ANCHOR

Copyright 2016. All rights reserved. No part of this document may be reproduced in any form or by any means without permission from Walker Parking Consultants/Engineers, Inc.

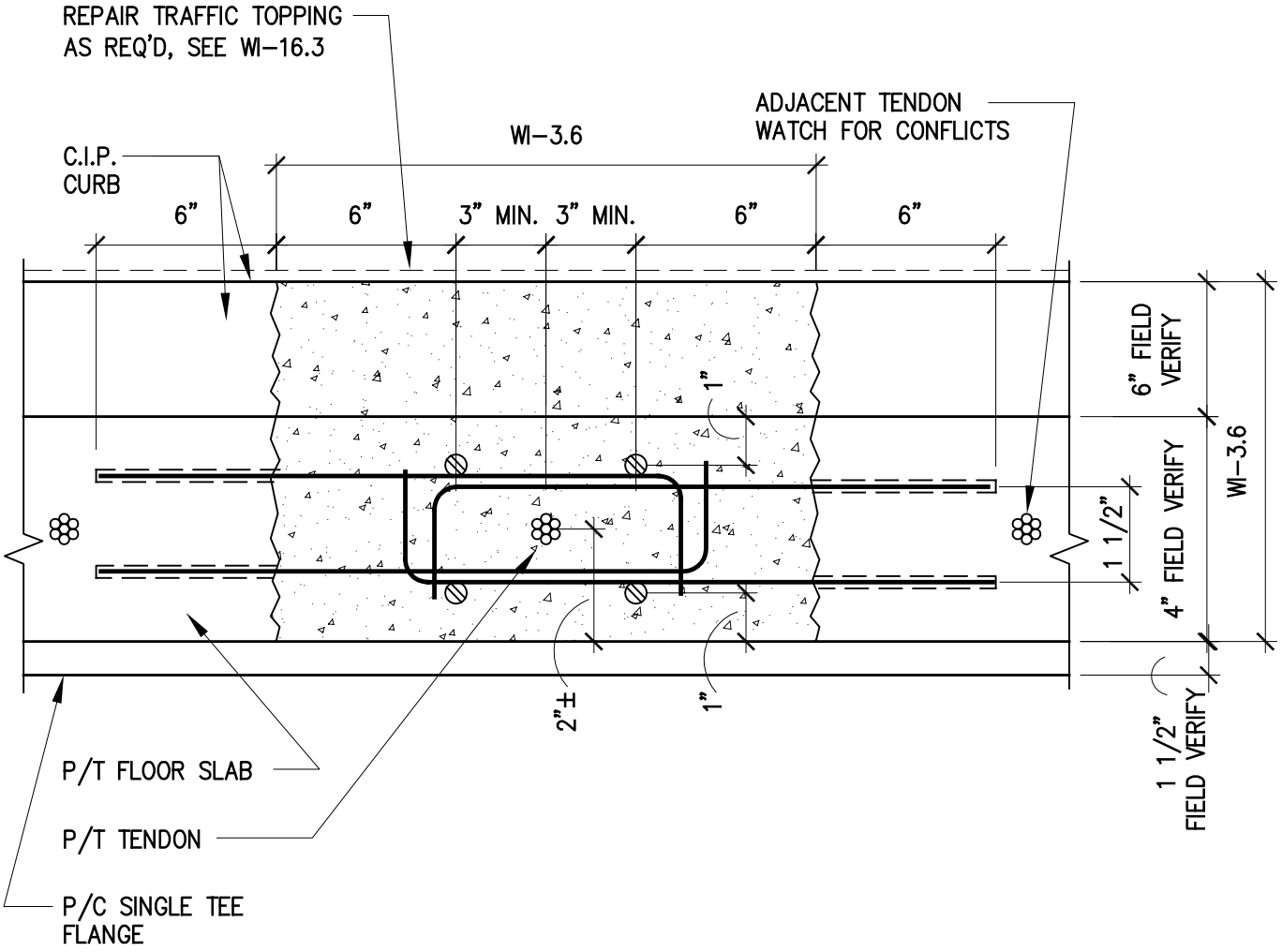

NOTES:

1. REFER TO DETAIL 21.3.0 FOR ADDITIONAL INFORMATION.
2. CONCRETE PATCH TO BE FLUSH WITH SURROUNDING CONCRETE, NOT FLUSH WITH EXISTING TRAFFIC TOPPING. AFTER CONCRETE PATCH IS CURED REPAIR TRAFFIC TOPPING PER WI-16.3.

21.3.1

SECTION VIEW DOWEL BARS

("FOR CLARIFICATION ONLY")

Copyright 2016. All rights reserved. No part of this document may be reproduced in any form or by any means without permission from Walker Parking Consultants/Engineers, Inc.

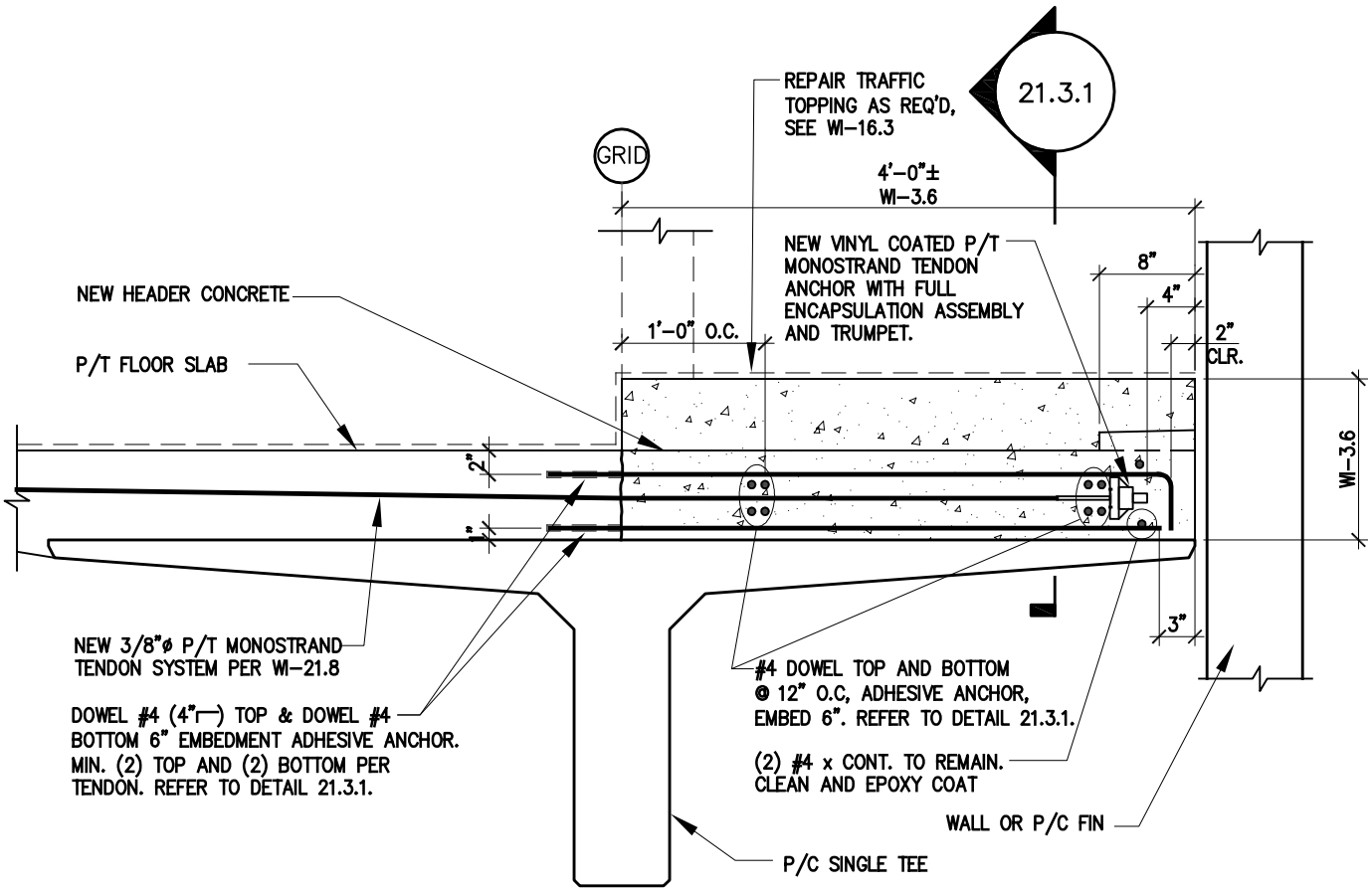

NOTES:

1. REFER TO DETAIL 21.2.0 AND 21.3.1 FOR ADDITIONAL INFORMATION.
2. CONCRETE REPAIR AND REINFORCEMENT SHALL BE PAID FOR AS PART OF WORK ITEM 3.6.
3. STRESS NEW TENDONS AFTER NEW HEADER CONCRETE "IN FRONT OF" LIVE AND DEAD ENDS HAS REACHED A MINIMUM OF 3500 PSI COMPRESSIVE STRENGTH.
4. MAINTAIN SHORING UNTIL WORK ITEM 3.6 IS COMPLETE.
5. CONCRETE PATCH TO BE FLUSH WITH SURROUNDING CONCRETE, NOT FLUSH WITH EXISTING TRAFFIC TOPPING. AFTER CONCRETE PATCH IS CURED REPAIR TRAFFIC TOPPING PER WI-16.3.

21.4.0 REPLACE P/T (DEAD) END ANCHORAGE

Copyright 2016. All rights reserved. No part of this document may be reproduced in any form or by any means without permission from Walker Parking Consultants/Engineers, Inc.

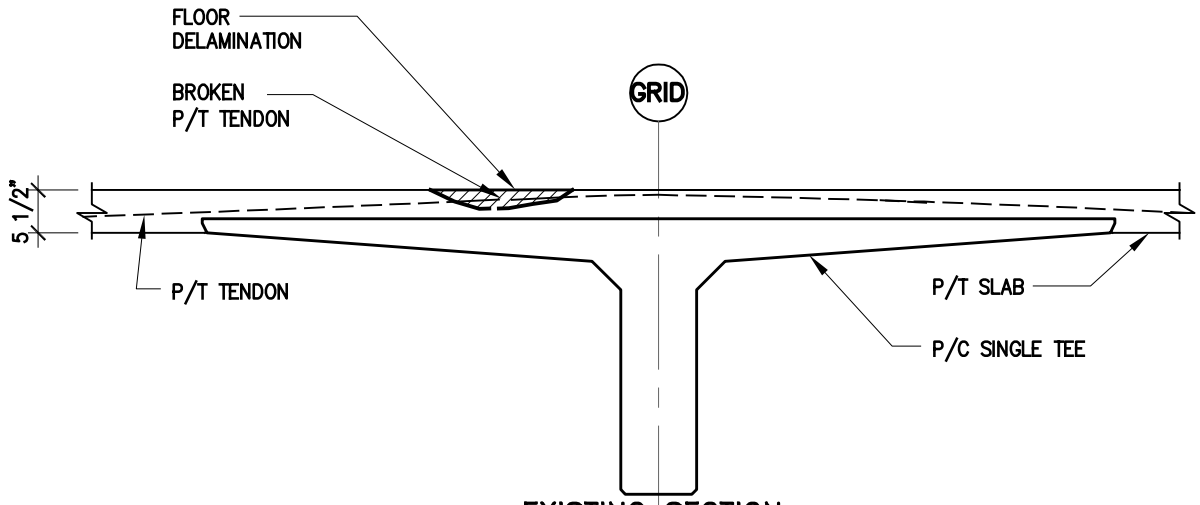

EXISTING SECTION

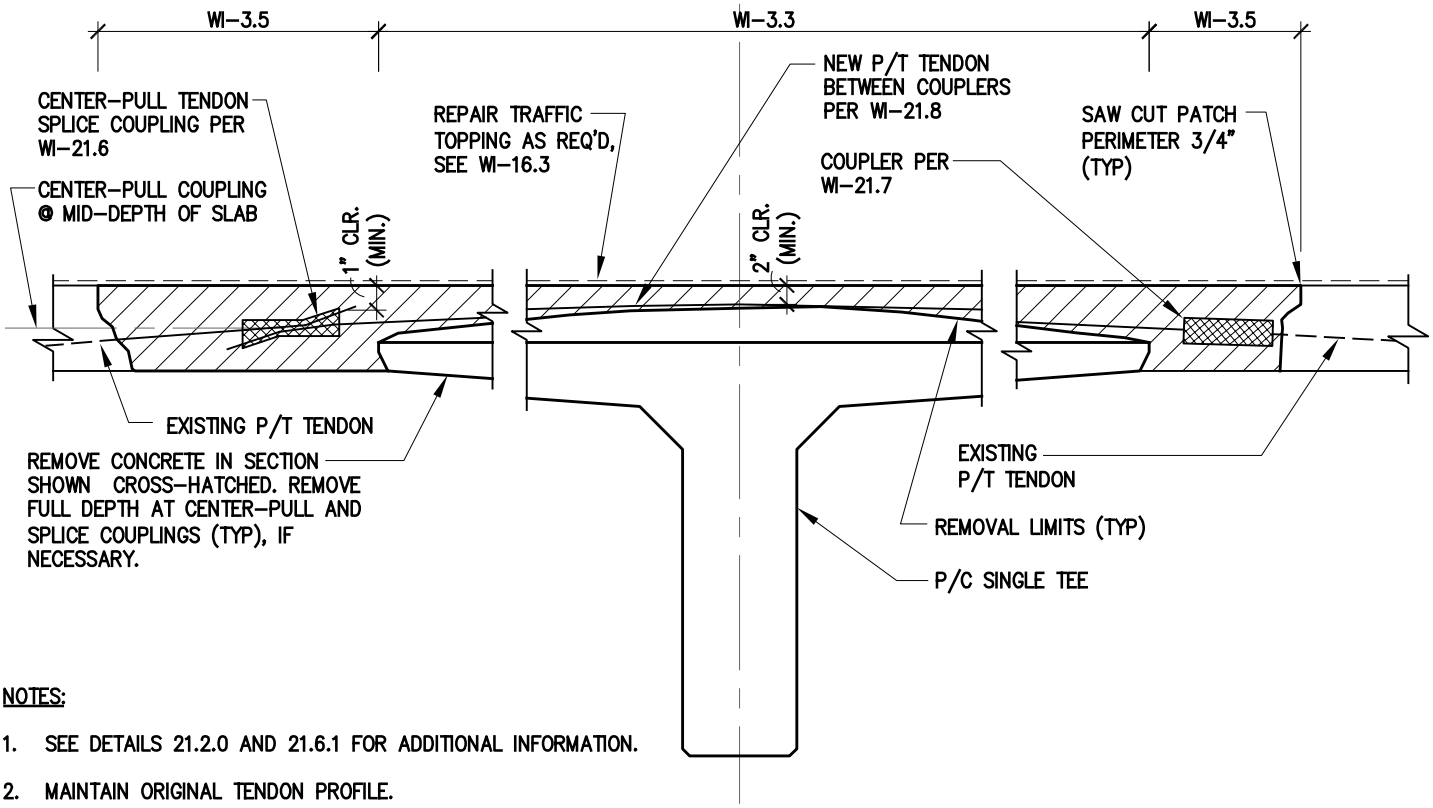

NOTES:

1. SEE DETAILS 21.2.0 AND 21.6.1 FOR ADDITIONAL INFORMATION.
2. MAINTAIN ORIGINAL TENDON PROFILE.
3. CONVENTIONAL REINFORCING NOT SHOWN FOR CLARITY.
4. MAINTAIN SHORING UNTIL WORK ITEM 3.5 IS COMPLETE.
5. CONCRETE REPAIR AND REINFORCEMENT SHALL BE PAID FOR AS PART OF WORK ITEM 3.5.
6. CONCRETE PATCH TO BE FLUSH WITH SURROUNDING CONCRETE, NOT FLUSH WITH EXISTING TRAFFIC TOPPING. AFTER CONCRETE PATCH IS CURED REPAIR TRAFFIC TOPPING PER WI-16.3.

REPAIR SECTION
(ENLARGED)

TENDON SPLICE COUPLING

21.6.0 21.7.0

Copyright 2016. All rights reserved. No part of this document may be reproduced in any form or by any means without permission from Walker Parking Consultants/Engineers, Inc.

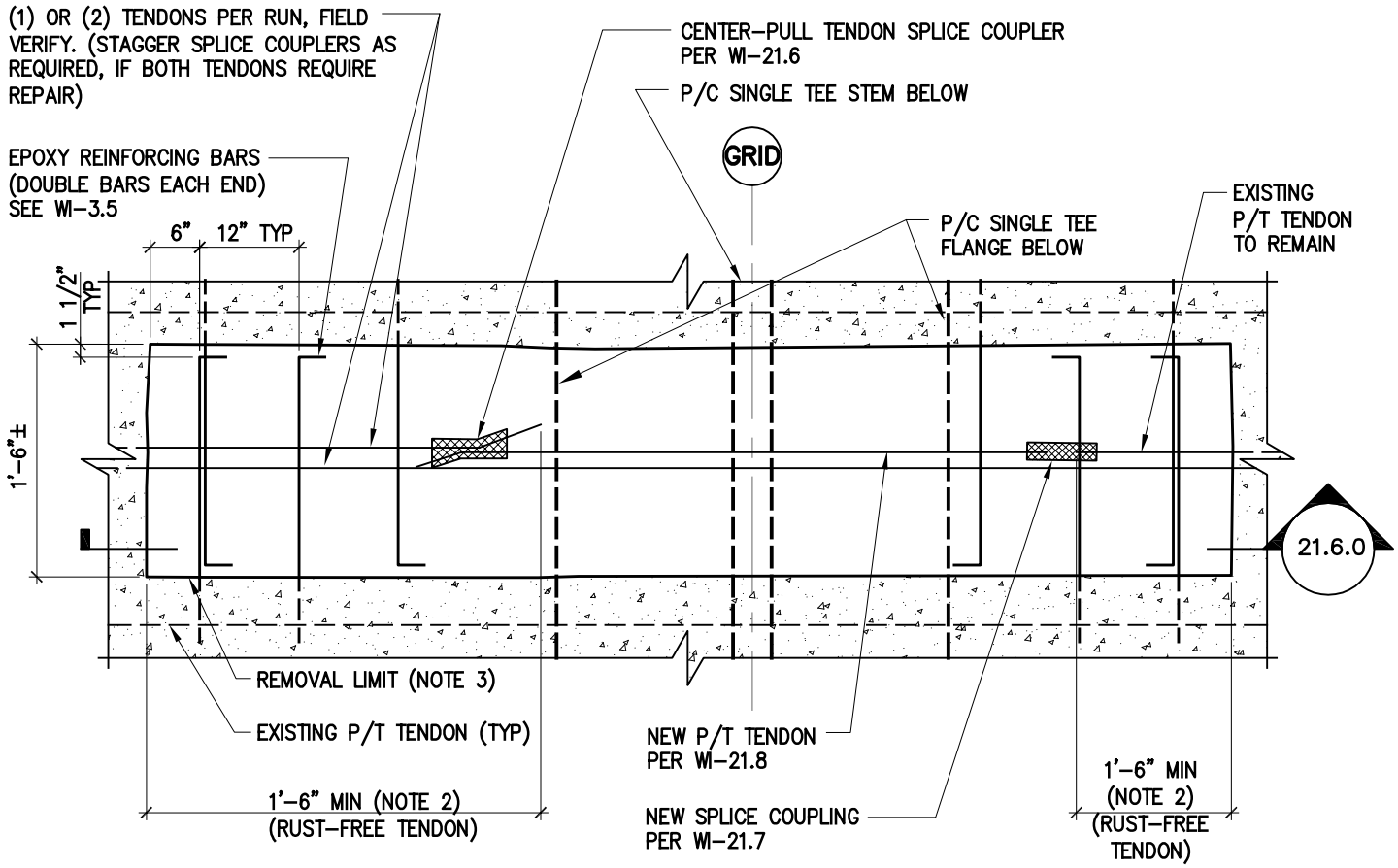

PARTIAL FLOOR PLAN

CAUTION:
FLOOR SLAB HAS POST-TENSIONING TENDONS. THESE TENDONS ARE NEAR FLOOR SURFACE AT SPALLS, DELAMINATIONS, AND OVER P/C SINGLE TEE FLANGE. CONTRACTOR SHALL EXERCISE EXTREME CAUTION WHEN SAW CUTTING AND REMOVING CONCRETE SO AS NOT TO DAMAGE EXISTING TENDONS OR TENDON SHEATHING. TENDONS MAY BREAK WITH EXPLOSIVE FORCE WHEN CUT. CHIPPING WITH 15 LB HAMMERS SHALL BE USED IN LIEU OF SAW CUTTING NEAR SHALLOW TENDONS.

NOTES:

1. SEE DETAIL 21.6.0 FOR ADDITIONAL INFORMATION.
2. INCREASE OR DECREASE CONCRETE REMOVAL LENGTH AS REQUIRED BY STRESSING AND INSTALLATION METHODS.
3. CONCRETE REPAIR AND REINFORCEMENT SHALL BE PERFORMED AND PAID FOR UNDER WORK ITEM 3.3 OR 3.5; SEE DETAIL 21.6.0.
4. STAGGER SPLICE COUPLERS IF MORE THAN (1) TENDON PER RUN REQUIRES REPAIR. ALTERNATE CENTER-PULL COUPLERS ON OPPOSITE SIDES OF GRID LINE.
5. LOCATE SPLICE COUPLINGS ALONG EXISTING TENDON PROFILE AT SLAB MID-DEPTH.

21.6.1

TENDON SPLICE COUPLING - PLAN

("FOR CLARIFICATION ONLY")

Copyright 2016. All rights reserved. No part of this document may be reproduced in any form or by any means without permission from Walker Parking Consultants/Engineers, Inc.

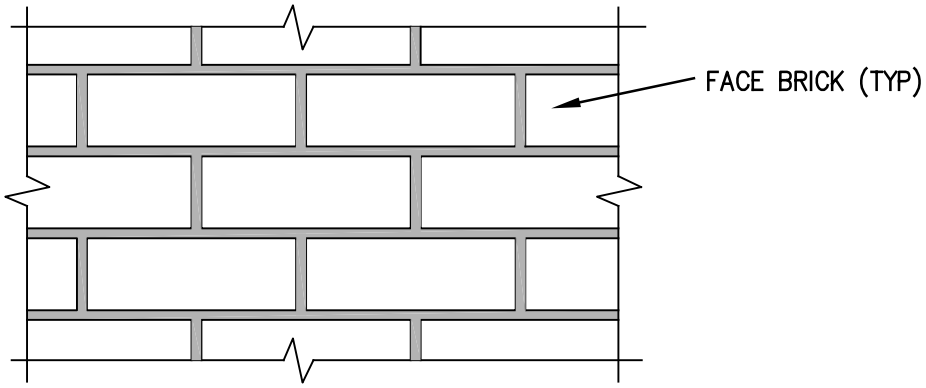

ELEVATION

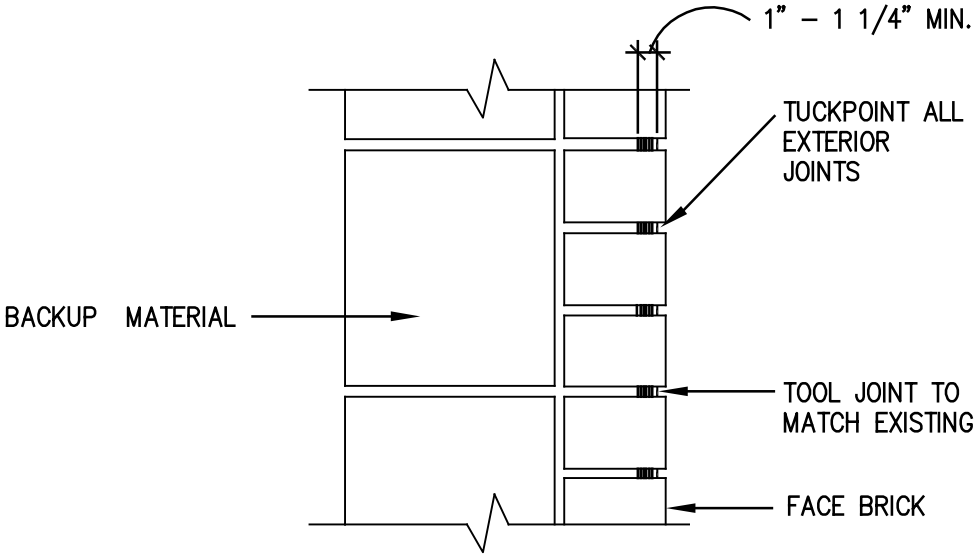

SECTION

NOTES:

1. REPLACEMENT MORTAR SHALL BE TYPE "N" MORTAR (SEE WORK ITEM DESCRIPTION). MATCH EXISTING MORTAR COLOR. TUCKPOINT MORTAR IS TO BE PRE–HYDRATED TO REDUCE EXCESSIVE SHRINKAGE.

2. REMOVE MORTAR 1" – 1 1/4" MIN. OR TO SOUND MORTAR WHICHEVER IS GREATER. MORTAR CUT BACK TO A UNIFORM DEPTH. REMAINING MORTAR SURFACE TO BE SQUARE WITH BRICK SURFACE.

3. FLUSH DEBRIS FROM JOINT WITH AIR AND/OR WATER.

4. DAMPEN JOINT PRIOR TO PLACING PRE–HYDRATED POINTING MORTAR (NO FREE STANDING WATER). TIGHTLY PACK IN 1/4" LAYERS. EACH LAYER TO BE "THUMBPRINT" HARD PRIOR TO INSTALLING NEXT LAYER.

5. TOOL JOINT TO ORIGINAL PROFILE WHEN "THUMBPRINT" HARD.

6. SEE WORK ITEM SPECIFICATION FOR ADDITIONAL INFORMATION.

MASONRY REPAIR - TUCKPOINTING

35.1.0

Copyright 2016. All rights reserved. No part of this document may be reproduced in any form or by any means without permission from Walker Parking Consultants/Engineers, Inc.

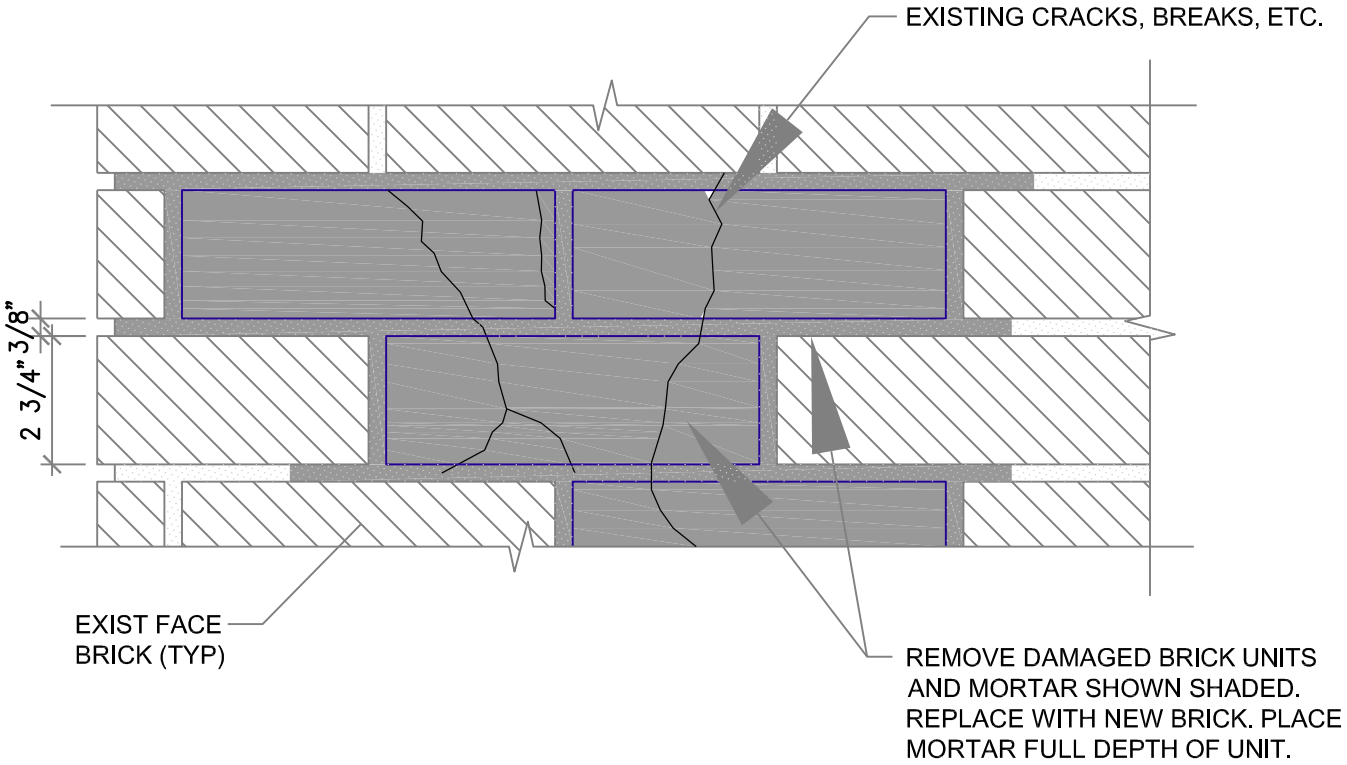

ELEVATION

NOTES:
1. MORTAR JOINT REPLACEMENT AT BRICK MASONRY UNIT REPLACEMENT LOCATIONS IS INCIDENTAL, NO EXTRA PAYMENT UNDER TUCKPOINTING WORK ITEM.
2. DO NOT DAMAGE ADJACENT BRICK BY OVERCUTTING.
3. REPLACEMENT BRICK TO BE APPROVED BY ENGINEER AND/OR OWNER PRIOR TO START OF WORK.

35.3.0

REMOVE AND REPLACE FACE BRICK

Copyright 2016. All rights reserved. No part of this document may be reproduced in any form or by any means without permission from Walker Parking Consultants/Engineers, Inc.